MultiTech Systems

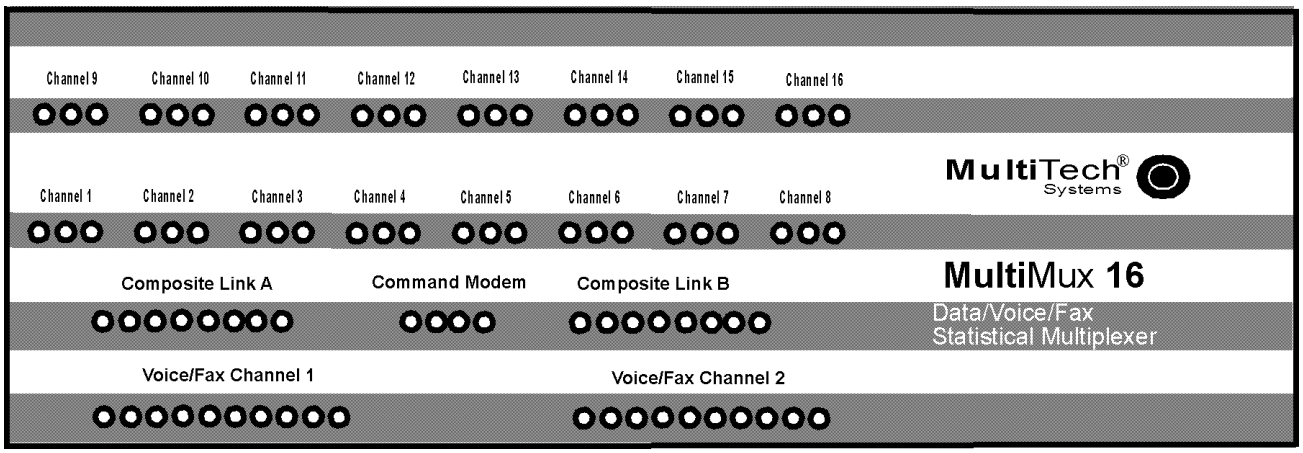

MultiMux™

MMV1600/3200 Series

Data/Voice/Fax Priority Statistical Multiplexer

Owner's Manual

NOTE: This equipment has been tested and found to comply with the limits for a **Class A** digital device, pursuant to Part 15 of the FCC Rules. These limits are designed to provide reasonable protection against harmful interference when the equipment is operated in a commercial installation. This equipment generates, uses and can radiate radio frequency energy, and if not installed and used in accordance with the instructions, may cause harmful interference to radio communications. Operation of this equipment in a residential area is likely to cause harmful interference in which case the user will be required to correct the interference at his own expense.

Warning: Changes or modifications to this unit not expressly approved by the party responsible for compliance could void the user's authority to operate the equipment.

The CE mark is affixed to the enclosed MultiTech product to confirm compliance with the following European Community Directives:

Council Directive 89/336/EEC of 3 May 1989 on the approximation of the laws of Member States relating to electromagnetic compatibility;

and

Council Directive 73/23/EEC of 19 February 1973 on the harmonization of the laws of Member States relating to electrical equipment designed for use within certain voltage limits;

both amended by

Council Directive 93/68/EEC of 22 July 1993 on the harmonization of CE marking requirements.

Owner's Manual

82020109 Revision J

MultiMux (#MMV1600C) (#MMV3200C)

This publication may not be reproduced, in whole or in part, without prior expressed written permission from Multi-Tech Systems, Inc. All rights reserved.

Copyright © 1997, by Multi-Tech Systems, Inc.

Multi-Tech Systems, Inc. makes no representations or warranties with respect to the contents hereof and specifically disclaims any implied warranties of merchantability or fitness for any particular purpose. Furthermore, Multi-Tech Systems, Inc. reserves the right to revise this publication and to make changes from time to time in the content hereof without obligation of Multi-Tech Systems, Inc. to notify any person or organization of such revisions or changes.

Record of Revisions

Revision	Description
G (4/15/96)	Manual revised with minor editorial comments.
H (9/30/96)	Manual revised with minor editorial comments.
I (4/27/97)	Manual revised to include CE Mark and minor editorial comments. All pages at Revision I.
J (8/07/97)	Manual revised to include new command. All pages at Revision J.

Patents

This Product is covered by one or more of the following U.S. Patent Numbers: ***5.301.274; 5.309.562***; ***5.355.365; 5.355.653; 5.452.289; 5.453.986***. Other Patents Pending.

TRADEMARK

Trademark of Multi-Tech Systems, Inc. are as follows: MultiMux, MultiModem and the Multi-Tech logo.

Multi-Tech Systems, Inc.
2205 Woodale Drive
Mounds View, Minnesota 55112
(763) 785-3500 or (800) 328-9717
Fax 763-785-9874
Tech Support (800) 972-2439
Internet Address: http://www.multitech.com

Table of Contents

Chapter 1 - Introduction and Description
1.1 Introduction 1-1
1.2 About This Manual 1-1
1.3 Background 1-3
1.3.1 Description of Statistical Multiplexing 1-4
1.4 Product Description 1-6
1.5 System Features 1-10
1.5.1 Voice/Fax 1-10
1.5.2 Networking 1-10
1.5.3 Dual Composite Links 1-10
1.5.4 Dynamic Load Balance 1-11
1.5.5 Channel Flexibility 1-11
1.5.6 Flow Control 1-11
1.5.7 Channel Switching 1-12
1.5.8 Parameter Memory 1-12
1.5.9 Command Modem 1-12
1.5.10 Downline Parameter Loading 1-12
1.5.11 Diagnostics 1-13
1.5.12 Operational Statistics and Auto-Reporting 1-13
1.5.13 Dynamic Buffering 1-13
1.5.14 Response Time Control 1-14
1.5.15 Synchronous Data Channel 1-14
1.6 FCC Regulations for Telephone Line In terconnection 1-15
1.7 DOC Terminal Equipment 1-16
1.8 Specifications 1-17
1.8.1 Async Channels 1-17
1.8.2 System Control 1-17
1.8.3 Composite Link 1-18
1.8.4 Internal DSU 1-18
1.8.5 Sync Data Channel 1-18
1.8.6 Voice Channel 1-18
1.8.7 Command Modem 1-19
1.8.8 Electrical/Physical 1-19
1.8.9 Compatibility 1-20

Chapter 2 - Configuration
2.1 Introduction 2-1
2.2 Configuration 1 2-2
2.3 Configuration 2 2-4
2.4 Configuration 3 2-5
2.5 Configuration 4 2-8
2.6 Configuration 5 2-11
2.7 Configuration 6 2-13
2.8 Configuration 7 2-15
2.9 Configuration 8 2-17

Chapter 3 - Front and Rear Panel Descriptions
3.1 Introduction 3-1
3.2 Front Panel 3-1
3.3 Back Panel 3-5
3.3.1 ON/OFF Switch 3-5
3.3.2 Power Connector 3-5
3.3.3 2400 BPS Modem Dial-Up Line Connector 3-5
3.3.4 Command Port Terminal/PC Connector 3-6
3.3.5 Composite Link A Internal DSU Connector 3-6
3.3.6 Composite Link A External Modem/DSU Connector 3-6
3.3.7 Composite Link B Internal DSU Connector 3-6
3.3.8 Composite Link B External Modem/DSU Connector 3-6
3.3.9 Voice/Fax Channel 2 E&M Connector 3-6
3.3.10 Voice/Fax Channel 2 FXS Connector 3-7
3.3.11 Voice/Fax Channel 2 FXO Connector 3-7
3.3.12 Voice/Fax Channel 1 E&M Connector 3-7
3.3.13 Voice/Fax Channel 1 FXS Connector 3-7
3.3.14 Voice/Fax Channel 1 FXO Connector 3-8
3.4 DIP Switches and Shunt 3-9
3.4.1 Aggregate Board Switch SW-5 3-10
3.4.2 Channel Board Number of Channels Switch 3-10
3.4.4 V.24/V.35 Shunt 3-11

Chapter 4 - Installation
4.1 Introduction 4-1
4.2 Unpacking 4-1
4.3 Installation Procedure 4-1

Chapter 5 - Commands
5.1 Introduction 5-1
5.2 Command Description 5-5
5.2.1 General Commands 5-5
5.2.2 Channel Parameter Commands 5-9
5.2.3 Composite Link Speed and Clocking Commands 5-16
5.2.4 Additional Composite Link Commands 5-18
5.2.5 Voice/Fax Commands 5-21
5.2.6 Test Commands 5-26
5.2.7 Command Modem Commands 5-28

Chapter 6 - Operating Procedures
6.1 Introduction 6-1
6.2 MultiMux Operating Procedures 6-1
6.3 Voice/FaxOperating Procedures 6-5
6.4 Command Modem Operating Procedures 6-7
Chapter 7 - Troubleshooting
7.1 Introduction 7-1
7.2 Importance of Composite Statistics 7-1
7.3 Test Cables 7-2
7.4 Troubleshooting Guide 7-3
7.5 Channel Device Testing 7-11
7.6 DSU and Communications Line Testing 7-12
7.7 MultiMux Functional Testing Procedures 7-13
7.8 Voice/Fax Channel Testing 7-14
7.9 Sync Data Channel Testing 7-16

Chapter 8 - Service, Warranty and Tech Support
8.1 Introduction 8-1
8.2 Limited Warranty 8-1
8.3 Tech Support 8-2

Appendices

Appendix A ASCII Character Code/Hex/Decimal Conversion Chart A-1
Appendix B RS232C Interface Specification B-1
Appendix C Cabling Diagrams C-1
Appendix D Command Modem Commands D-1
Appendix E Command Modem S-Register Functions E-1
Appendix F Flow Control Background F-1

Figures

1-1 MultiMux MMV1600 Series 1-1
1-2 Simple Communications Network 1-3
1-3 MultiMux MMV1600/3200 Series Block Diagram 1-7

2-1 Configuration 1 2-2
2-2 Configuration 2 2-4
2-3 Configuration 3 2-5
2-4 Configuration 4 (FXO to FXS) 2-8
2-5 Configuration 5 (E&M I-V) 2-11
2-6 Configuration 6 (FXS to FXS) 2-13
2-7 Configuration 7 (E&M I-V to FXS) 2-15
2-8 Configuraiton 8 (LAN to LAN) 2-17

3-1 MultiMux Front Panel 3-1
3-2 Back Panel 3-5
3-3 Switches and Shunts 3-9
3-4 RS232C/V.35 Shunts 3-11

4-1 Back Panel 4-2
4-2 Composite Link Cabling 4-4
4-3 PC Board Removal 4-5
4-4 Shunts 4-5

7-1 Off Line Test Modes 7-2

Tables

3-1 LED Indicators 3-2

4-1 Cabling Procedure 4-1
4-2 V.35 Interface 4-4
4-3 Configuration Procedure 4-7

5-1 Command Summary 5-2

6-1 MultiMux Operating Procedures 6-1
6-2 Voice/Fax Operating Procedures 6-5
6-3 Command Modem Operating Procedures 6-7

7-1 Data Troubleshooting Guide 7-4
7-2 Voice/Fax Troubleshooting Guide 7-8
7-3 Channel Device Testing Procedure 7-11
7-4 DSU and Communications Line Testing Procedure 7-12
7-5 MultiMux Functional Testing Procedures 7-13
7-6 Voice/Fax Channel Testing Procedures 7-15
7-7 Sync Data Channel Testing Procedure 7-16

1.1
Introduction

Congratulations! Your new MultiMux MMV1600/3200 series is one of the finest statistical multiplexers on the market today. The MMV1600/3200 series high speed Priority Statistical Multiplexer (PSM) supports up to 16 or 32 asynchronous input channels, two synchronous composite links or a synchronous composite link and a sync data channel, and two voice/fax channels. The MultiMux is completely software driven and is controlled by you through its command port. This gives you great flexibility and ease of operation. This Owner's Manual will help you to install and use your MultiMux, and also provide you with a valuable information resource in the future.

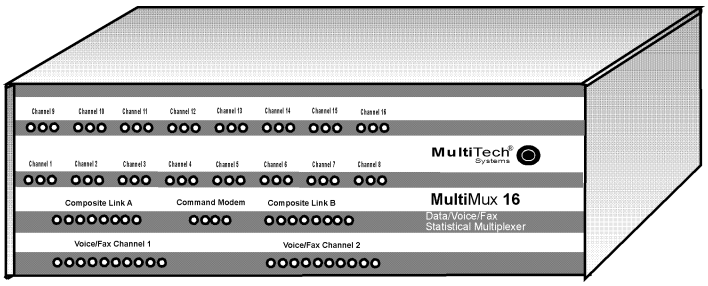

Figure 1-1. MultiMux MMV1600 Series

1.2
About This Manual

This manual is comprised of eight chapters. There are also several appendices at the end of the manual, most of which is a condensed version of the information contained in the chapters. These appendices can be used as a quick reference. The information contained in each chapter is as follows:

Chapter 1 - Introduction

This chapter is an introduction to the world of multiplexing. Since you have already acquired the MultiMux, you may have an extensive background in multiplexing. In which case, this introduction will provide a good review.

Chapter 2 - Configuration

This chapter defines the configurations of the MMV1600/3200 series and provides some typical examples of how the MultiMux is configured. The MMV1600/3200 series is available in several models; 16 and 32 channel units with internal command modem, composite link digital service units (DSUs) supporting synchronous communications, and two optional voice/fax channels. The typical examples explain how the MultiMux can be used in various environments.

Chapter 3 - Front and Back Panel Descriptions

Chapter 3 describes the front panel indicators, the switches and jumpers within the cabinet and the back panel connections. The front panel indicators are divided into channel, composite link, command modem and voice/fax channel groups. The back panel provides all the cable connections.

Chapter 4 - Installation

Chapter 4 provides the procedures for unpacking, installing and cabling your MultiMux. After your MultiMux is cabled, an initial power on procedure is provided for you to display and modify the channel and composite link parameters to fit your configuration.

Chapter 5 - Commands

The MultiMux is software-driven and controlled through its command port and the supervisory console. This chapter describes the AT commands and the impact each has on your system's operation.

Chapter 6 - Operating Procedures

Chapter 6 provides the operational information for your MultiMux. The MultiMux operating procedures address the channel and composite link parameters. The command modem operating procedures address the command modem access, dialing, and remote access procedures.

Chapter 7 - Troubleshooting

This chapter is a guide to troubleshooting your MultiMux. It contains a listing of error conditions, probable causes and suggested fixes or steps designed to isolate the failing unit in your communications network.

Chapter 8- Service, Warranty and Tech Support

Chapter 8 provides instructions on getting service for the MultiMux at the factory, a statement of the limited warranty, information about our user bulletin board service, and space for recording information about your multiplexer prior to calling Multi-Tech's Technical Support.

1.3
Background

Any data communications environment that has more than one asynchronous line going between common locations can probably benefit by installing a pair of statistical multiplexers (stat muxes). A stat mux performs the function of combining several asynchronous data communication channels into one composite synchronous signal that can be transmitted between two locations more inexpensively than the cost of the individual lines. Figure 1-2 shows a simple communications network. Individual users connect to asynchronous channels and the composite (or aggregate) communications line between the two locations is the "link". Link protocol is the communications discipline used between the two multiplexers and typically operates at a speed higher than the individual asynchronous units connected to each multiplexer.

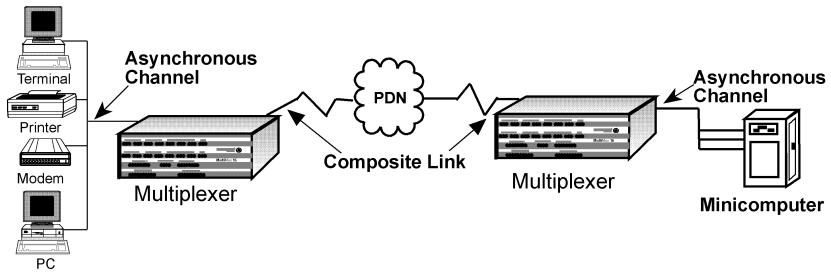

Figure 1-2. Simple Communications Network

One reason that a stat mux works is that typically an asynchronous terminal device is not used to its capacity. Studies show that as little as 10 to 15% utilization of such lines is a common occurrence. These percentages indicate that the most efficient combination of lines in a muxed asynchronous environment is between four and eight lines.
Although the primary reason for installing a mux is to save on communications costs, two other benefits are also present. One is the inherent error correction existing in muxed data and the other is data security. Since a mux functions by taking individual asynchronous data and transmitting it as synchronous data packets, there is an error detection and retransmission scheme built in. Error correction is so vital in many transmission types, such as graphic data and program transmission, that many muxes are used mainly for their error correction capabilities. The other benefit is data security which is achieved by the fact that the individual data streams are encrypted into a single communication line on one end of the link and then broken up into individual components on the other end. Someone wishing to "tap" into a muxed signal must not only have the link protocol, which is typically a proprietary version of High Level Data Link Control (HDLC), but must also know the individual channel assignment schemes and data formats.

1.3.1
Description of Statistical Multiplexing

A statistical multiplexer (also known as a stat mux) is a device that allows several other devices (usually computer terminals or PCs) to communicate over a single transmission line. Sometimes called concentrators, they take data from different devices and combine it into a single stream that can be transmitted, via a synchronous modem, to an identical multiplexer at another location, where the stream is then separated back into its original form. Physically, a mux looks like a box with a bunch of serial ports and some LEDs. The most typical task of the MultiMux is to connect a group of PCs or terminals at one site to a mini or mainframe computer at another site via a single set of modems rather than using individual modems for each PC or terminal.

1.3.1.1
Statistical Multiplexing

Statistical multiplexing is sometimes referred to as statistical time-division multiplexing (STDM). The use of the voice-grade phone line (or any other communications link) is based not on peak data rates, but on effective (or average) data rates.
During the peaks, when the sum of the data rates of the channels being served exceeds the data rate of the composite link, a statistical multiplexer saves the excess data in buffers (in effect, allowing individual channel buffers to expand). The buffers are emptied as soon as the activity falls off. The proper allocation of buffer space, plus the implementation of “flow control” and “pacing” techniques to accommodate unusually high peaks, allows the use of composite link speeds that are less than the sum of the individual channel speeds.
In effect, a statistical multiplexer services only active channels. However, the efficiency thus realized is not the only benefit of the technique. Because composite link activity need not be synchronized with the activity on the individual

channels, there is considerable flexibility in the choice of the composite channel protocol and speed. The use of a synchronous protocol like HDLC provides for error detection and retransmission over the composite link. Thus, asynchronous terminals, which have no inherent error-recovery capability, can enjoy end-to-end data integrity.
With the implementation of voice and fax information streams into the STDM, an additional technology was needed to accommodate the time-sensitive nature of voice and fax transmissions. This new technology is called Priority Statistical Multiplexing™ (PSM) by Multi-Tech. With this new technology, data packets are limited in length and voice and fax packets are given priority. The length of the data packet is determined dynamically according to the link speed preserving the time requirements of normal speech and non-error correcting fax transmissions.

1.3.1.2
Communications

The basic functions of multiplexing are to make communications more efficient, to provide a means of improving accuracy of asynchronous communications by using synchronous techniques, and to improve data security by encrypting several data streams into one coded link. Communications using the MMV1600/3200 can be point-to-point or multipoint. In point-to-point, a MultiMux at a host site is connected to a MultiMux at a remote site. Communications which you need to concern yourself with include those between the two MultiMuxes designed to carry the data traffic (composite link), the command modem communications between sites used to control both locations from one location and any communications between terminals and computers connected to the MultiMuxes.
The channel devices can be any asynchronous RS232 compatible units, from “dumb terminals” to personal computers running asynchronous communications software. The connection between the channel devices and the MultiMux is made through an RS232 interface cable. Asynchronous modems (long haul or short haul), asynchronous modem emulators and asynchronous line drivers (DCE devices) can be used in this connection (up to 19.2K bps) to extend the distance between the channel devices and the MultiMux. Due to the channel switching feature of the MultiMux, channels can be switched to any channels on the remote end. This adds considerable flexibility to your point-to-point communications. You cannot interconnect channels on the same local MultiMux unit.
The connection between the two MultiMuxes is the composite link with a Data Service Unit (DSU) providing the interface between the MultiMux and the Digital Data Service (DDS) or dedicated network. The composite data link is full-duplex and synchronous using HDLC protocol. The composite link can use either dedicated (leased) or DDS lines. In addition to the internal DSU's available on the MMV1600/3200, you can use any compatible external DSU or modem. The internal DSU processes serial synchronous digital data over a DDS network, or other four wire unloaded twisted-pair wiring system. Data transmission on the composite link starts at 2400 bps, doubles to 4800, 9600, 19,200 and finally to 56,000 bps in multipoint and point-to-point applications.

1.4
Product Description

The MultiMux MMV1600/3200 series is available in two basic models: a 16 channel or 32 channel unit with internal command modem, optional composite link DSUs and two optional voice/fax channels. The MMV1608 MultiMux can connect up to eight async devices and the MMV1616 up to 16 async devices to its asynchronous channels that transfer data at speeds up to 19.2K bits per second (bps). The MMV3200 series can connect up to 32 async devices to its channels. The command modem allows you to configure your async channels, composite link, origin and destination of the voice channels, and the voice mode of operation. The composite link can be configured for either one or two internal Digital Service Units (DSUs) or equivalent external DSUs or modems for digital communications over a Digital Data Service (DDS) or dedicated network. The voice/fax channels allow voice and fax traffic over the same composite link without the need for a separate voice network.
The MMV1600/3200 series has three types of pc boards; the main pc board is called the aggregate pc board, the board that interfaces to the asynchronous channel devices is the channel board, and the third pc board is the voice/fax board that connects to the telephone and fax equipment. A simplified block diagram of a MultiMux is shown in Figure 1-3. The aggregate pc board is in the center of the figure and connects the other two pc boards. The aggregate board is the mind of the MultiMux; that is, it provides the control and data paths from the channel devices and the voice and fax traffic from the telephone equipment and fax machines to the composite link and on to the remote location. This board also provides the interface to the command port for the supervisory console and the command modem interface.
The channel board provides the interface to the asynchronous devices such as pcs, printers, modems, if a device is remote, and work stations. Each channel board connects up to eight devices to the MultiMux. An MMV1608 MultiMux has one channel board, MMV1616 has two channel boards to connect up to 16 devices and the maximum is 32 devices on a MMV3232 MultiMux. The channel board is connected to the aggregate board by two ribbon cables that carry data and control information between the aggregate board and the channels. Any device with a serial interface can be connected to a channel board. Each channel board has eight RS232C connectors to connect to the devices.
The voice/fax board connects telephone and fax type equipment to the MultiMux for transmission over the composite link to a remote location. This board takes the analog voice or fax traffic and converts it to digital information for use by the aggregate board. Digitized voice or fax traffic from the remote location can also be converted to analog signals and

received by the local telephone or fax machine. The voice/fax board has two identical voice/fax channels. Each channel can connect to a private branch exchange (PBX, a small telephone switch), a telephone or fax machine. Each channel has three connectors labeled E&M, FXO and FXS. The E&M (Ear and Mouth) connection is for connecting to the E&M trunk side of a PBX. The FXO (Foreign Exchange Office) connection is to the station side of a PBX and assumes that an FXS (Foreign Exchange Station) connection is made at the remote location. The type of voice/fax connection depends on the

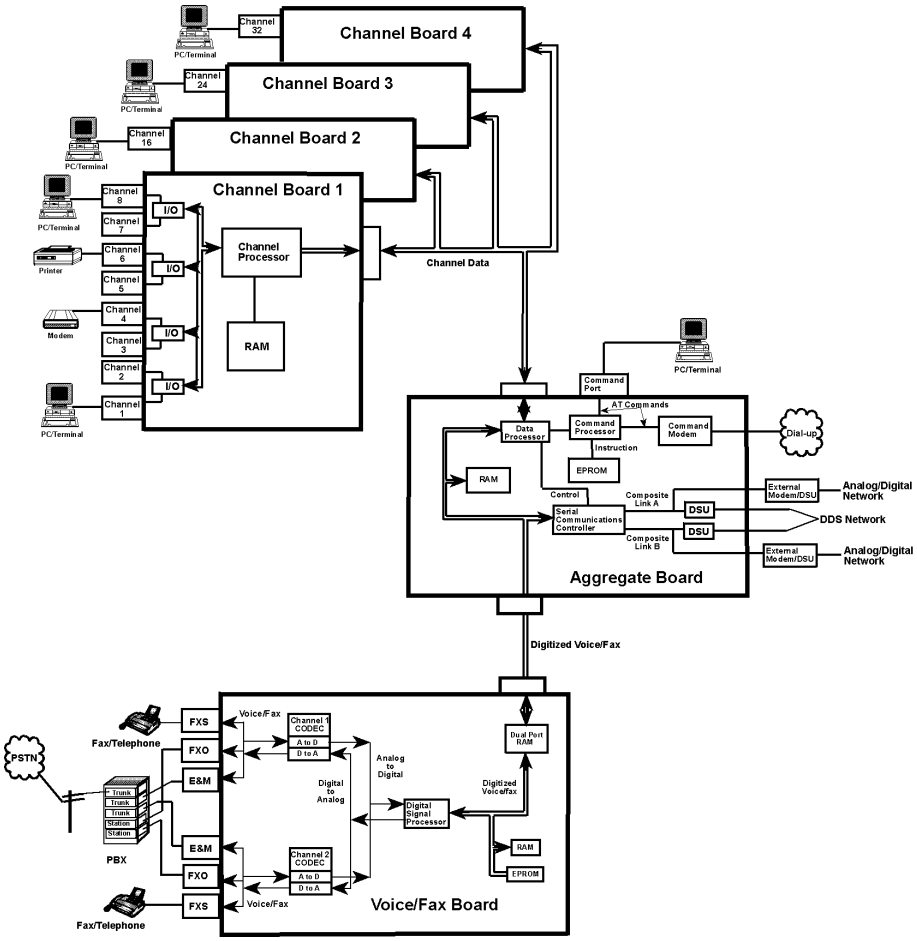

Figure 1-3. MultiMux MMV1600/3200 Series Block Diagram

application of the MultiMux. That is, if both the local and remote MultiMuxes are connected to the E&M trunk side of the PBXs, then the E&M connection is used. If the local MultiMux is connected to a local PBX and only one instrument (telephone set or fax machine) at the remote location, then the FXO connection is used. The local FXO connection is to the station side of the PBX and the remote instrument is connected to the FXS connection. The FXO connection to the PBX uses a station number on the PBX. The local FXO connection accepts the ringing voltage from the PBX and the remote FXS connection outputs a ringing voltage. If the application is to have a dedicated instrument at both locations, then the FXS connection is used. When the calling instrument goes off hook in a FXS connection, the called instrument rings and the voice conversation begins or the fax transmission starts.

To setup a MultiMux MMV1600/3200 series, the async devices have to be connected to the channels, the telephone and fax machines connected to the voice/fax channels, and the composite link(s) connected to the public data network (PDN). The MultiMux then needs to be configured for the channel devices, the origin and destination of the voice channels and the mode of operation for the voice channels, and the composite links for synchronous and full duplex communication over a DDS or dedicated network. The async devices are connected to CHANNEL 1 through CHANNEL 8 connectors on the back panel of the MultiMux MMV1608 with RS232 cables. The MultiMux MMV1616 has eight additional channel connectors for connecting up to 16 devices.

When the voice/fax board is used, connections can be made for either channel 1 or channel 2 or both channels and the types of connections are the same for both channels. If a PBX is being used at both the local and remote locations and an E&M trunk connection is desired, then the E&M connections are used for the desired channels. If a PBX is being used at the local location and a dedicated instrument (telephone or fax machine) is used at the remote location, then the FXO connection is made to the station side of the PBX and the remote location is connected to the FXS connector on the back panel of the remote MultiMux. If a dedicated instrument is being used at the both the local and remote locations for either voice or fax communications over the composite link, then the FXS connection is used.

The composite links need to be connected to a PDN either with internal 56K bps DSUs or equivalent external DSUs or synchronous modems. If both composite links are being used, they both have to be connected to the PDN. The internal DSUs are connected to the PDN through the COMPOSITE LINK A or B INTERNAL DSU connector on the back panel. External DSUs or modems are connected to the PDN by the COMPOSITE LINK A or B EXTERNAL MODEM/ DSU connector on the back panel and if the DSU or modem is V.35 compatible, the shunt on the aggregate board needs to be moved from the RS232C position to the V.35 position. There is a shunt for composite link A and composite link B.

The supervisory console is connected to the aggregate board through the COMMAND PORT connector on the back panel. The supervisory console connection is also an RS232 connection. This completes a typical hardware setup for a MultiMux. Now the MultiMux has to be configured to talk to the channel devices and communicate over the composite link.

Configuration of a MultiMux is accomplished through a combination of setting DIP switches behind the front panel and software commands entered through the supervisory console. The DIP switches determine whether the MultiMux is an eight, sixteen, twenty-four or thirty-two channel multiplexer, whether the composite link devices are internal DSUs or external devices, whether or not the command modem will accept remote access, etc. The DIP switches control the hardware setup and the operating setup is controlled through software commands. The software commands are entered at a terminal connected to the COMMAND PORT which are transferred to either the command processor or command modem in the MultiMux. The software commands are AT commands that configure the channel devices to communicate with the MultiMux and configure the composite link devices to communicate with the PDN. To configure a channel device, the correct channel speed has to be established, number of data and stop bits in a word determined, the type of flow control used and whether or not pacing is active. These are just some of the AT commands that are used to configure the channel devices.

When the MultiMux MMV1600/3200 series is powered up, the command processor transfers the stored configuration of the channel devices to the data processor. The data processor takes the configuration information and configures each channel for its particular conditions. The composite link has to be configured for its parameters before data can be transferred.

The composite link parameters are determined by more than just AT commands transferred to the command processor. The composite link parameters are determined by what type of device is used, whether it is internal or external, speed, what type of remote multiplexer we are communicating with and a number of line conditioning parameters. The type of device used as the composite link device is determined by whether the device is internal or external which is established by DIP switch settings and by the type of device installed in the MultiMux or connected to the EXTERNAL COMPOSITE LINK RS232C/V.35 connector on the back panel. If an internal composite link DSU is installed in the MultiMux, the DIP switch would be set for an internal composite link DSU and a DSU speed select AT command ($DSUA/BSPxxxxx) would determine the operational speed of the DSU. The MultiMux MMV1600/3200 series is now ready to transfer data from its async devices through an internal composite link DSU.

1.5
System Features

1.5.1
Voice/Fax

With the addition of the voice/fax board into the MultiMux, you now can have voice and fax traffic along with your normal data communications on the same composite link. The two voice/fax channels provide all the necessary interfaces to access a private branch exchange (PBX, a small telephone switch) and all the services provided by the PBX. If a voice/fax channel is connected to the trunk side of the PBX, the remote location has free access to the local public switched telephone network (PSTN). With the addition of voice/fax, a free voice or fax communication can be established on top of the data communication over the same leased data communications network.

1.5.2
Networking

The networking feature adds the capability to design complex networks, it also meets a very basic need: saving phone line costs. Networking MultiMuxes allows the stringing of several MultiMux units together via dual composite links, using "pass-through" channel connections, to any MultiMux in a multinode network. The MultiMux checks for a code that will instruct it to receive the data or pass it on to the next node. Each composite link on a mux can establish rerouted connections with up to four other muxes in a network. Voice/fax channels must currently be connected point-to-point. However, voice/fax channel networking will be available as a future enhancement.

1.5.3
Dual Composite Links

The composite links of the MultiMux are capable of synchronous and full duplex communications over a digital data services (DDS) or dedicated network. The MultiMux has two composite links in which either integral 56K bps DSUs or equivalent external DSUs or synchronous modems can be connected. With dual composite links, another feature is added to the MultiMux in the way of networking. Networking MultiMuxes allows the stringing of several MultiMux units together via their composite links. This feature allows data to be routed over the composite links using pass-through channel connection to any MultiMux in the multinode network. The MultiMux checks for a code that will instruct it to receive the data or pass it on to the next node. Each composite link on a mux can establish rerouted connections with up to four other muxes in a network.

1.5.4
Dynamic Load Balance

A feature of MultiMux MMV1600/MMV3200 series multilink multiplexers is their ability to balance data flow between two composite links to utilize each to its maximum efficiency. To activate the feature you select D (for dynamic) as the composite link for each channel using the MLD command. At that point the MultiMux processor picks the least busy link for transmission. This feature can only be used in a point-to-point network using two MultiMuxes.

1.5.5
Channel Flexibility

The MultiMux permits a great deal of flexibility in configuring channel parameters. You can mix up channel options, including speed, word length, stop bits, parity, flow control, pacing methods, echo and pass-through. Channel control commands let you change single channels or all channels with a single command. By using the downline loading capability or the command modem, channels can be configured at the other end of the network.

1.5.6
Flow Control

Flow control regulates the volume of data entering the buffers. When a particular channel buffer is almost full, a flow control command is issued which stops further activity until the buffer is emptied. The most common flow control methods currently used are Xon/Xoff, RS232C signal control (using DTR or CTS) and ENQ/ACK. The MultiMux supports all three.

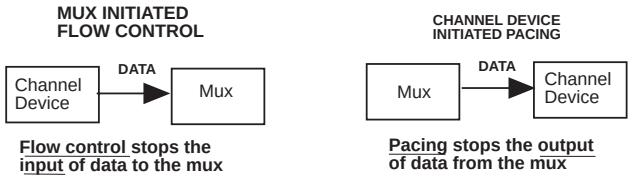

1.5.7
Channel Switching

A feature of the MultiMux MMV1600/MMV3200 series is its ability to switch channels between mux units. That is, an individual channel on a source node can be switched to any channel on its destination node. The only restriction on channel switching is that the channel can only pass thoroughly six nodes on its way to its destination. Channel switching adds flexibility to the MultiMux by allowing you to build networks matched to your user needs.

1.5.8
Parameter Memory

A nonvolatile memory for storing configurations and options means that the MultiMux remains configured until you change it. Using this feature, you can configure a MultiMux and save the parameters to memory, turn it off, ship it and use it without having to reconfigure it.

1.5.9
Command Modem

The MultiMux can connect to a dial-up phone network through an integral 2400/1200/300 bps V.22bis-compatible modem called the “command modem”. The command modem is an asynchronous modem used for remote configuration of the mux. The command modem is not to be confused with the “link modem”, which is either an internal or external synchronous device handling the data transfers over the composite link between two muxes.
By using the command modem, you get the equivalent of a remote Command Port console. Your MultiMux can be dialed into from a remote location for remote testing and configuration. The command modem will automatically answer incoming calls.

1.5.10
Downline Parameter Loading

Operational parameters for both the local and remote MultiMux units can be set from one location. The MMV1600/3200 series can downline load parameters for the data channels, but not for the voice/fax channels. Data channel parameters can be downline loaded to the MMV1600/MMV3200, MMH1600/MMH3200 and the MMH900 series units. When power is first applied (or a Reset command is executed) to the local or remote MultiMux, operational parameters are automatically sent over the composite link to the remote MultiMux. For this function to work, the 8-position DIP switch SW1 on the local (sending) MultiMux must be set to the OPEN position and on the remote (receiving) MultiMux the 8-position DIP switch SW1 must be set to the CLOSED position.

1.5.11
Diagnostics

Diagnostics in a multiplexer network are of considerable importance. When a multiplexer fails there is not just one operator down, but many. That is why the MultiMux is equipped with several diagnostic modes that will test every aspect of the network. The diagnostics include easy-to-execute tests for each channel, the composite link and for various components of the MultiMux unit itself. There are ten different test modes to ensure error free operation. They include Local and Remote Digital Loop tests, switch and LED tests, Nonvolatile Memory test, three other tests, a “Watch-dog Timer” reset test, and the voice/fax loopback test.

1.5.12
Operational Statistics and Auto-Reporting

Operational statistics provides the activity report for the MultiMux network, and Auto-Reporting provides a means to report on these statistics through the supervisory console on a set periodic time cycle. Statistics such as receive-block errors pinpoint modem or line problems, and flow control time totals indicate channel devices being set at excessive speeds. Two simple commands are all that is necessary to select statistical reporting and time cycle. If your command

port is also connected to a printer, the reports can provide an easy means of generating data for better network management.

1.5.13
Dynamic Buffering

A basic requirement of all muxes is some sort of buffering capability to temporarily hold channel data while it is being assembled into a block. In the early days, a mux was sometimes judged by the size of its buffers. Large buffers are unnecessary in newer designs that include sophisticated dynamic buffer allocation techniques where the amount of buffer per channel is assigned on an as-needed basis.
In the MultiMux, each channel is assigned 1K of buffer, but in the case where more buffer is needed, the MultiMux will start assigning additional buffers from the channels not requiring it. In this way a single channel can have up to 8K of buffer if required. When dynamic buffering is combined with efficient flow control and the automatic transmission of data from each channel at set intervals, as in the MultiMux, very smooth operation for each user is the result.

1.5.14
Response Time Control

Response time control is the technique used by a mux to make sure that no user experiences undue delays in performance due to a specific channel using too much link time. This can occur if one of the channels is performing a high volume batch function, such as a print dump or program transfer.
There are a variety of priority control (response time) schemes in use by different mux vendors. Some vendors use a switch selection approach where each channel can be given a high, medium or low setting with the low used for those channels requiring higher volume batch transfers. There are also software-sensing response time techniques where the microprocessor actually monitors channel activity, and when a high volume is sensed, that channel is given a lower priority so it will not crowd out the others.
The MultiMux response time control method is one where data is transferred from each channel on a timed basis while limiting the amount sent with each transmission.
This insures that interactive users will not experience undue delays but, on the other hand, batch activity can still be accommodated. This, combined with a Response Time command and the ability to shut off channels not being used, gives the MultiMux a very efficient priority control system.

1.5.15
Synchronous Data Channel

The synchronous data channel feature allows synchronous data to be multiplexed along with the async data and voice. For example, this feature allows a LAN bridge to be connected to the synchronous data channel and transfer LAN data along with the normal MultiMux async data and voice/fax services over the high speed composite link. The synchronous data channel feature supports synchronous HDLC protocols up to 128K bps.
With this feature, composite link B is converted to a synchronous data channel (port B) to which the sync device is connected. The sync data channel is controlled by commands for speed and clocking that allow the synchronous data to flow smoothly along with the async data and the voice/fax traffic. The three types of data are prioritized so that the quality of voice/fax transmissions, the timeliness of synchronous data, and the integrity of asynchronous data are all preserved.

1.6
FCC Regulations for Telephone Line Interconnection

1. This equipment complies with Part 68 of the FCC rules. On the outside surface of this equipment is a label that contains, among other information, the FCC registration number and ringer equivalence number (REN). If requested, this information must be provided to the telephone company.
2. A suitable jack (USOC connecting arrangement) for this equipment is shown. If applicable, the facility interface codes (FIC) and service order codes (SOC) are described.
3. The ringer equivalence number (REN) is used to determine the quality of devices which may be connected to the telephone line. Excessive REN's on the telephone line may result in the devices not ringing in response to an incoming call. In most, but not all areas, the sum of the REN's should not exceed five (5.0). To be certain of the number of devices that may be connected to the line, as determined by the total REN's, contact the telephone company to determine the maximum REN for the calling area.
4. If this equipment causes harm to the telephone network, the telephone company will notify you in advance. But if advance notice isn't practical, the telephone company will notify the customer as soon as possible. Also, you will be advised of your right to file a complaint with the FCC if you believe it is necessary.
5. The telephone company may make changes in its facilities, equipment, operations, or procedures that could affect the operation of the equipment. If this happens, the telephone company will provide advance notice in order for you to make necessary modifications in order to maintain uninterrupted service.
6. If trouble is experienced with this equipment (the model of which is indicated below) please contact Multi-Tech Systems, Inc. at the address shown below for details of how to have repairs made. If the trouble is causing harm to the telephone network, the telephone company may request you remove the equipment from the network until the problem is resolved.
7. No repairs are to be made by you. Repairs are to be made only by Multi-Tech Systems or its licensees. Unauthorized repairs void registration and warranty.
8. This equipment cannot be used on public coin service provided by the telephone company. Connection to Party Line Service is subject to state tariffs. (Contact the state public utility commission, public service commission or corporation commission for information.)
9. If so required, this equipment is hearing aid compatible.

Manufacturer:	Multi-Tech Systems, Inc.
Model Number:	#MMV16XXC/56/56/V #MMV32XXC/56/56/V
FCC Registration Number:	AU7USA-18883-DE-N (DSU) AU7USA-20328-MD-E
Ringer Equivalence:	0.3B (Command modem)
Modular Jack (USOC)	RJ11C or RJ11W (single line)
Service Center in U.S.A.	Multi-Tech Systems Inc. 2205 Woodale Drive Mounds View, MN 55112 USA (612) 785-3500 or (800) 328-9717 U.S. Fax (612) 785-9874

1.7
DOC Terminal Equipment

Notice: The Canadian Department of Communications label identifies certificated equipment. This certification means that the equipment meets certain telecommunications network protective, operational and safety requirements. The department does not guarantee the equipment will operate to the user's satisfaction.
Before installing this equipment, users should ensure that it is permissible to be connected to the facilities of the local telecommunications company. The equipment must also be installed using an acceptable method of connection. In some cases, the company's inside wiring associated with a single line individual service may be extended by means of a certified connector assembly (telephone extension cord). The customer should be aware that compliance with the above conditions may not prevent degradation of service in some situations.
Repairs to certified equipment should be made by an authorized Canadian facility designated by the Supplier. Any repairs or alterations made by the user to this equipment; or equipment malfunctions, may give the telecommunications company cause to request the user to disconnect the equipment.
Users should insure for their own protection that the electrical ground connections of the power utility, telephone lines and internal metallic water pipe system, if present, are connected together. This precaution may be particularly important in rural areas.
Caution: Users should not attempt to make such connections themselves, but should contact the appropriate electric inspection authority, or electrician, as appropriate.

The **Load Number** (LN) assigned to each terminal device denotes the percentage of the total load to be connected to a telephone loop which is used by the device, to prevent overloading. The termination on a loop may consist of any combinations of devices subject only to the requirement that the total of the Load Numbers of all the devices does not exceed 100. The load number for the Command Modem is 7.

1.8
Specifications

1.8.1
Async Data Channels

Number of Channels	Up to sixteen (#MMV16XXC), or up to thirty-two (#MMV32XXC)
Maximum Speed All Channels	19,200 bps
Channel Speeds	All standard speeds from 300 bps to 19.2K bps
Data Format	Asynchronous: 5, 6, 7, or 8 data bits, with 1,1.5, or 2 stop bits
Parity	Odd, even, or none
Local Echo	On or off selectable for each channel
Flow Control	Xon/Xoff, CTS on/off, or HP ENQ/ACK selectable for each channel
Pacing	On or off selectable for each channel, DTR on/off, or Xon/Xoff
Interface	RS232C/CCITT V.24; 25-pin female D connectors

1.8.2
System Control

Local Access	Through MultiMux's RS232C "Command Port"
Remote Access	Through MultiMux's internal dial-up CCITT V.22bis/V.22, Bell 212A/103 (2400/1200/300 bps) command modem Device Any asynchronous keyboard terminal, PC in terminal mode (local access), or any standard dial-up 2400/1200/300bps V.22bis/V.22, 212A/103 modem (remote access)
Command Functions	Menu-driven/help screen approach. Commands to select channel speeds, flow control methods, listing of parameters, help screens, storing of configurations, downline loading, status reporting, echo controls, resets, pacing, parity, stop bits, response time priorities, test modes, modem configurations, and other parameters.
Diagnostics	Memory tests, Local and Remote Digital Loop tests, Switch test, LED test, Non-Volatile RAM test, Watchdog Timer, and Voice/fax Channel Loopback test.

1.8.3
Composite Link

Number of Links	Two (Links A and B)
Data Format	Synchronous
Link Speeds	Up to 256K bps
Link Protocol	Proprietary modified HDLC
Error Correction	16-bit CRC block check with ARQ
Interface	RS232C/CCITT V.35/V.24, or use MultiMux integral DSU

1.8.4
Internal DSU:

Description	Integral card DSU, synchronous and full duplex over DDS network, 4-wire non-loaded metallic wire pairs or LADS (Local Area Data Set) at transmission speeds of 2400,4800, 9600, 19,200 or 56,000 bps
Line Interface	DDS interface with a RJ48S 8-position keyed jack

1.8.5
Sync Data Channel

Number of Channels	One (Port B)
Data Format	Synchronous
Channel Speed	Up to 128K bps
Channel Protocol	Any Synchronous HDLC
Interface	RS232C/CCITT V.35/V.24; 25-pin male D connector

1.8.6
Voice Channels

Number of Channels	Two independent channels
Voice Digitization Rates	9600 and 16K bps
Automatic Fax Modulation/ Demodulation	Group 3 Fax Rates (2400, 4800, 7200 and 9600)
Interfaces	E&M 2 and 4 wire, FXS, FXO
Signaling	DTMF
Line Interface	RJ48 Jack for E&M and RJ11 Jacks for FXS and FXO

1.8.7
Command Modem:

Description	Bell 212A/103 & CCITT V.22bis/V.22 compatible asynchronous, full duplex over dial-up lines
Speeds	2400, 1200 and 0-300 bps
Line Interface	RJ11C jack for dial-up line

1.8.8
Electrical/Physical:

Voltage	115 volts AC (standard), 240 volts AC (optional)
Frequency	47 to 63 Hz
Power Consumption	50 watts (16 channel), 57 watts (32 channel)
Fuse	3AG, 1 Amp S/B (slo-blo)
Dimensions	6.7" high x 15.1" wide x 13" deep (MMV16xx) 17 cm high x 38.4 cm wide x 33cm deep 10" high x 15.1" wide x 13" deep (MMV32xx) 25.4 cm high x 38.4 cm wide x 33 cm deep
Weight	24 pounds (10.9kg) (MMV16xx) 30 pounds (13.6kg) (MMV32xx)

1.8.9
Compatibility

Communicate With	MMH1600/MMH3200 and MMH900 Series for data only and MMV800 Series for data and voice/fax communications.

2.1
Introduction

The MultiMux MMV1600/MMV3200 Series is available in two models, a sixteen and thirty-two channel unit with an internal command modem, optional composite link DSUs and two optional voice/fax channels, dial-up capability from a remote location into the command modem and a command port for local AT command configuration information. The MultiMux MMV1600/MMV3200 Series is capable of communicating with Multi-Tech's MultiMux MMH1600/ MMH3200 Series and the MultiMux MMH900 Series for data communications.
The configuration of the MultiMux MMV1600/MV3200 series is as follows:

Model	Description
MMV1608C	Eight channel unit with internal command modem
MMV1616C	Sixteen channel unit with internal command modem
MMV3208C	Eight channel unit with internal command modem
MMV3216C	Sixteen channel unit with internal command modem
MMV3224C	Twenty-four channel unit with internal command modem
MMV3232C	Thirty-two channel unit with internal command modem
MMVXXXXC/56	Internal 56K bps composite link DSU
MMVXXXXC/56/56	Two internal 56K bps composite link DSUs
MMVXXXXC/V	Two internal voice/fax channels
MMVXXXXC/56/V	Internal 56K bps composite link DSU and two internal voice/fax channels
MMVXXXXC/56/56/V	Two internal 56K bps composite link DSUs and two voice/fax channels

Valid voice/fax configurations are as follows:

Configuration	Description
E&M to E&M	Any phone or fax machine connected to the PBX at one site can call any phone or fax machine connected to a PBX at the other end.
FXS to FXS	No number needs to be dialed. If the phone or fax machine on one end goes off hook, the phone or fax machine on the other end rings.
FXS to FXO	The phone and fax machine at the FXS site acts as though they are extensions of the PBX at the FXO site.
FXS Loop Start to E&M Dial	When the phone or fax machine at the FXS site goes off hook, it connects to the PBX at the E&M site.
FXS Ground Start to E&M Wink	When the phone or fax machine at the FXS site goes off hook, it connects to the PBX at the E&M site. This phone circuit needs to be a ground start circuit.

2.2
Configuration 1

Configuration 1 is a data-only configuration. This configuration has two Multi-Tech MultiMux MMV1616C/56 which are sixteen channel multiplexers with internal 56K bps composite link DSUs linking sites one and two over a Digital Data Service (DDS) network provided by your telco facility. The local site has the MMV1616C/56 connected to a host minicomputer. The remote site has fourteen terminals and two shared printers connected to the asynchronous channels of the remote mux. At the remote site, the terminals are communicating with the remote mux on 19.2K bps asynchronous channels, and the printers are configured for one setting above its cps rating. Configuration 1 is shown in Figure 2-1.

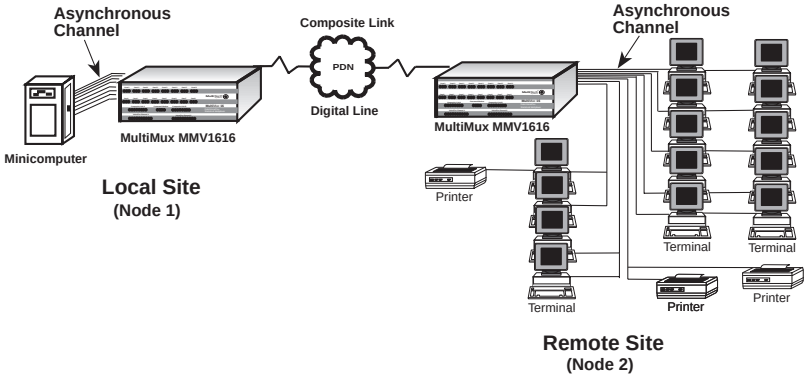

Figure 2-1. Configuration 1

The local async channels can be configured to communicate with any of the async channels at the remote site. The asynchronous channels of the local mux are configured with XON/XOFF software flow control enabled, so that the channel buffers in the local mux do not lose data from the host. With flow control enabled at the local mux, the local mux can tell the host when it feels that it's dynamic buffers are becoming full. For the same reasoning, pacing should be enabled at the remote site printer channels to ensure that all data is received by the printers. Pacing allows the printer to tell the remote mux not to send any more data until its buffers are cleared. Pacing may also be enabled at the remote site terminal channels if it appears that data is being lost at the terminals. The first set of parameters in the following examples are for the local mux and the second set are for the remote mux.

Local Channel Parameters/ Node # 01

CHN	SPD	WD	STP BIT	PAR	FLOW CTRL	ENQ/ ACK	ECHO	PACE	PASS EIA	PASS XON	DEST CHN	DEST NODE	LINK A/B
01	19200	8	1	NONE	XON/XOFF	OFF	OFF	OFF	OFF	OFF	01	02	A
02	19200	8	1	NONE	XON/XOFF	OFF	OFF	OFF	OFF	OFF	02	02	A
03	19200	8	1	NONE	XON/XOFF	OFF	OFF	OFF	OFF	OFF	03	02	A
04	19200	8	1	NONE	XON/XOFF	OFF	OFF	OFF	OFF	OFF	04	02	A
05	19200	8	1	NONE	XON/XOFF	OFF	OFF	OFF	OFF	OFF	05	02	A
06	19200	8	1	NONE	XON/XOFF	OFF	OFF	OFF	OFF	OFF	06	02	A
07	19200	8	1	NONE	XON/XOFF	OFF	OFF	OFF	OFF	OFF	07	02	A
08	19200	8	1	NONE	XON/XOFF	OFF	OFF	OFF	OFF	OFF	08	02	A
09	19200	8	1	NONE	XON/XOFF	OFF	OFF	OFF	OFF	OFF	09	02	A
10	19200	8	1	NONE	XON/XOFF	OFF	OFF	OFF	OFF	OFF	10	02	A
11	19200	8	1	NONE	XON/XOFF	OFF	OFF	OFF	OFF	OFF	11	02	A
12	19200	8	1	NONE	XON/XOFF	OFF	OFF	OFF	OFF	OFF	12	02	A
13	19200	8	1	NONE	XON/XOFF	OFF	OFF	OFF	OFF	OFF	13	02	A
14	19200	8	1	NONE	XON/XOFF	OFF	OFF	OFF	OFF	OFF	14	02	A
15	19200	8	1	NONE	XON/XOFF	OFF	OFF	OFF	OFF	OFF	15	02	A
16	19200	8	1	NONE	XON/XOFF	OFF	OFF	OFF	OFF	OFF	16	02	A

OK

Configuration 1 Local Site Channel Parameters

Local Channel Parameters/ Node #02

CHN	SPD	WD	STP BIT	PAR	FLOW CTRL	ENQ/ ACK	ECHO	PACE	PASS EIA	PASS XON	DEST CHN	DEST NODE	LINK A/B
01	19200	8	1	NONE	XON/XOFF	OFF	OFF	OFF	OFF	OFF	01	01	A
02	19200	8	1	NONE	XON/XOFF	OFF	OFF	OFF	OFF	OFF	02	01	A
03	19200	8	1	NONE	XON/XOFF	OFF	OFF	OFF	OFF	OFF	03	01	A
04	19200	8	1	NONE	XON/XOFF	OFF	OFF	OFF	OFF	OFF	04	01	A
05	19200	8	1	NONE	XON/XOFF	OFF	OFF	OFF	OFF	OFF	05	01	A
06	19200	8	1	NONE	XON/XOFF	OFF	OFF	OFF	OFF	OFF	06	01	A
07	19200	8	1	NONE	XON/XOFF	OFF	OFF	OFF	OFF	OFF	07	01	A
08	4800	8	1	NONE	XON/XOFF	OFF	OFF	ON	OFF	OFF	08	01	A
09	19200	8	1	NONE	XON/XOFF	OFF	OFF	OFF	OFF	OFF	09	01	A
10	19200	8	1	NONE	XON/XOFF	OFF	OFF	OFF	OFF	OFF	10	01	A
11	19200	8	1	NONE	XON/XOFF	OFF	OFF	OFF	OFF	OFF	11	01	A
12	19200	8	1	NONE	XON/XOFF	OFF	OFF	OFF	OFF	OFF	12	01	A
13	19200	8	1	NONE	XON/XOFF	OFF	OFF	OFF	OFF	OFF	13	01	A
14	19200	8	1	NONE	XON/XOFF	OFF	OFF	OFF	OFF	OFF	14	01	A
15	19200	8	1	NONE	XON/XOFF	OFF	OFF	OFF	OFF	OFF	15	01	A
16	4800	8	1	NONE	XON/XOFF	OFF	OFF	ON	OFF	OFF	16	01	A

OK

Configuration 1 Remote Site Channel Parameters

DSU TYPE	SPEED	CLOCKING	LOOP BACK
INTERNAL	56000	DDS	OFF

Configuration 1 Composite Link Configuration

2.3
Configuration 2

Configuration 2 is two MultiMux MMV1616C sixteen channel multiplexers with two external Multi-Tech 56K bps Digital Service Units (DSUs) linking the two sites over a Digital Data Service (DDS) network. The RS232C interface on The DSUs is connected to COMPOSITE LINK A EXTERNAL MODEM/DSU connector on the back panel of the MMV1616C. The MMV1616Cs are set up for an external link device with a maximum link speed of 56,000 bps. Composite link A needs to be set up for external clocking. Both external DSUs must be set for DDS clocking. Configuration 2 is shown in Figure 2-2.

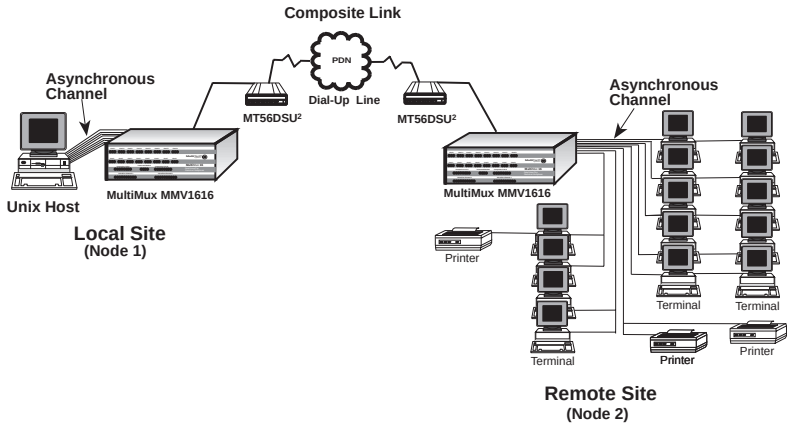

Figure 2-2. Configuration 2

The channels are set up with the same considerations as in Configuration 1. The composite link configuration may be changed using the List Composite Link Configuration (**$L**) command which is shown in the following example.

DSU TYPE	SPEED	CLOCKING	LOOP BACK
EXTERNAL	56000	EXTERNAL	OFF

Configuration 2 Composite Link Configuration

2.4
Configuration 3

Configuration 3 (Figure 2-3) is the networking configuration with one MultiMux MMV1616C and two MMV1608 multiplexers with the multiplexer at remote site 1 (Node 2) utilizing dual composite links. This networking configuration allows the local site (Node 1) with the host minicomputer to communicate with remote sites 1 and 2. Remote site 1 communicates with the local site and remote site 2 (Node 3) communicates through remote site 1 to the local site. Node 2 has two composite links with link A communicating with the local site and composite link B

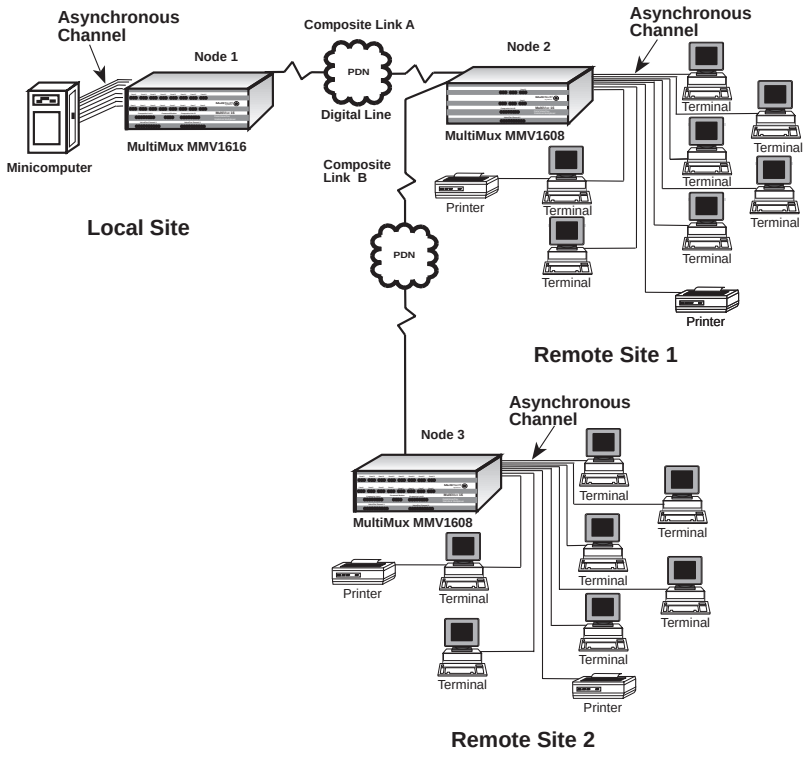

Figure 2-3. Configuration 3

communicating with Node 3. Node 1 is configured with channels one through eight assigned a destination node of 2 and channels nine through sixteen assigned a destination node of 3. Node 2 has channels one through eight set with a destination node of 1 which is the local site. Node 3 has channels one through eight set for destination channels nine through sixteen of node 1. Node 2 passes through all communications between nodes 1 and 3.

The first set of parameters in the following examples are for the local site (node 1), the second set for the remote site 1 (node 2) and the last set for remote site 2 (node 3).

Local Channel Parameters/ Node # 01

CHN	SPD	WD	STP BIT	PAR	FLOW CTRL	ENQ/ ACK	ECHO	PACE	PASS EIA	PASS XON	DEST CHN	DEST NODE	LINK A/B
01	19200	8	1	NONE	XON/XOFF	OFF	OFF	OFF	OFF	OFF	01	02	A
02	19200	8	1	NONE	XON/XOFF	OFF	OFF	OFF	OFF	OFF	02	02	A
03	19200	8	1	NONE	XON/XOFF	OFF	OFF	OFF	OFF	OFF	03	02	A
04	19200	8	1	NONE	XON/XOFF	OFF	OFF	OFF	OFF	OFF	04	02	A
05	19200	8	1	NONE	XON/XOFF	OFF	OFF	OFF	OFF	OFF	05	02	A
06	19200	8	1	NONE	XON/XOFF	OFF	OFF	OFF	OFF	OFF	06	02	A
07	19200	8	1	NONE	XON/XOFF	OFF	OFF	OFF	OFF	OFF	07	02	A
08	19200	8	1	NONE	XON/XOFF	OFF	OFF	OFF	OFF	OFF	08	02	A
09	19200	8	1	NONE	XON/XOFF	OFF	OFF	OFF	OFF	OFF	01	03	A
10	19200	8	1	NONE	XON/XOFF	OFF	OFF	OFF	OFF	OFF	02	03	A
11	19200	8	1	NONE	XON/XOFF	OFF	OFF	OFF	OFF	OFF	03	03	A
12	19200	8	1	NONE	XON/XOFF	OFF	OFF	OFF	OFF	OFF	04	03	A
13	19200	8	1	NONE	XON/XOFF	OFF	OFF	OFF	OFF	OFF	05	03	A
14	19200	8	1	NONE	XON/XOFF	OFF	OFF	OFF	OFF	OFF	06	03	A
15	19200	8	1	NONE	XON/XOFF	OFF	OFF	OFF	OFF	OFF	07	03	A
16	19200	8	1	NONE	XON/XOFF	OFF	OFF	OFF	OFF	OFF	08	03	A

OK

Configuration 3 Local Site Channel Parameters

Local Channel Parameters/ Node 02

CHN	SPD	WD	STP BIT	PAR	FLOW CTRL	ENQ/ ACK	ECHO	PACE	PASS EIA	PASS XON	DEST CHN	DEST NODE	LINK A/B
01	19200	8	1	NONE	XON/XOFF	OFF	OFF	ON	OFF	OFF	01	01	A
02	19200	8	1	NONE	XON/XOFF	OFF	OFF	ON	OFF	OFF	02	01	A
03	19200	8	1	NONE	XON/XOFF	OFF	OFF	ON	OFF	OFF	03	01	A
04	19200	8	1	NONE	XON/XOFF	OFF	OFF	ON	OFF	OFF	04	01	A
05	19200	8	1	NONE	XON/XOFF	OFF	OFF	ON	OFF	OFF	05	01	A
06	19200	8	1	NONE	XON/XOFF	OFF	OFF	ON	OFF	OFF	06	01	A
07	19200	8	1	NONE	XON/XOFF	OFF	OFF	ON	OFF	OFF	07	01	A
08	4800	8	1	NONE	XON/XOFF	OFF	OFF	ON	OFF	OFF	08	01	A

OK

Configuration 3 Remote Site 1 Channel Parameters

Local Channel Parameters/ Node 03

CHN	SPD	WD	STP BIT	PAR	FLOW CTRL	ENQ/ ACK	ECHO	PACE	PASS EIA	PASS XON	DEST CHN	DEST NODE	LINK A/B
01	19200	8	1	NONE	XON/XOFF	OFF	OFF	ON	OFF	OFF	09	01	A
02	19200	8	1	NONE	XON/XOFF	OFF	OFF	ON	OFF	OFF	10	01	A
03	19200	8	1	NONE	XON/XOFF	OFF	OFF	ON	OFF	OFF	11	01	A
04	19200	8	1	NONE	XON/XOFF	OFF	OFF	ON	OFF	OFF	12	01	A
05	19200	8	1	NONE	XON/XOFF	OFF	OFF	ON	OFF	OFF	13	01	A
06	19200	8	1	NONE	XON/XOFF	OFF	OFF	ON	OFF	OFF	14	01	A
07	19200	8	1	NONE	XON/XOFF	OFF	OFF	ON	OFF	OFF	15	01	A
08	4800	8	1	NONE	XON/XOFF	OFF	OFF	ON	OFF	OFF	16	01	A

OK

Configuration 3 Remote Site 2 Channel Parameters

2.5
Configuration 4

Configuration 4 is the data/voice/fax configuration with two MultiMux MMV1608C/56/V multiplexers with single composite link connecting a minicomputer and the station side of a PBX at the local site to a group of remote terminals and printer on the data part of the network and a telephone and fax machine on the remote voice/fax channels. This FXO to FXS configuration allows the remote site to communicate over the composite link to the local site and be able to use the local PBX facilities as if he/she were at the local site. The FXO to FXS configuration is shown in Figure 2-4. In this configuration the data communications is set up per configuration 1.
This configuration has the MV2 Voice/Fax board installed in the MMV1608/56/V multiplexers for the voice over data communications. The local site has the VOICE/FAX CHANNEL 1 and 2 FXO connectors on the back panel of the local multiplexer connected to a station card in the PBX. At the remote site, the two VOICE/FAX CHANNEL 1 and 2 FXS connectors on the back panel of the remote multiplexer are connected to a telephone and fax machine.

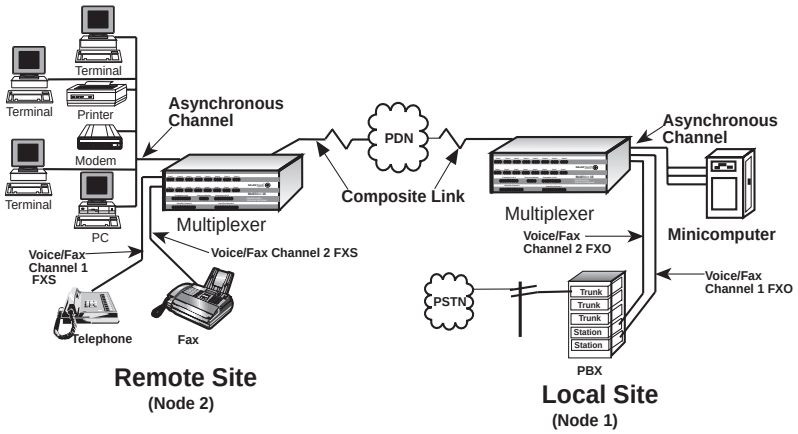

Figure 2-4. Configuration 4 (FXO to FXS)

The local site is configured for an FXO configuration on both voice/fax channels using the **V1LIFXO** and **V2LIFXO** commands and setting the Remote Interface type for an FXS configuration using the **V1RIFXS** and **V2RIFXS** commands. The parameters for the local voice/fax channels can be displayed using the **VL** (List the voice/fax channel parameters) command. The voice/fax channel parameters for the local site are shown in the Configuration 4 Local Site Voice/Fax Channel Parameters. The voice/fax channel parameters are described in Chapter 5 Commands of this manual.

LOCAL VOICE/FAX PARAMETERS CHANNEL1 LOCAL VOICE/FAX PARAMTERS CHANNEL 2

PARAMETER	STATUS	PARAMETER	STATUS
DESTINATION CHANNEL:	01	DESTINATION CHANNEL:	02
DESTINATION NODE:	02	DESTINATION NODE:	02
LINK A/B/D:	A	LINK A/B/D:	A
DIGITIZING RATE:	16000	DIGITIZING RATE:	16000
OUTPUT LEVEL ATTEN.:	02	OUTPUT LEVEL ATTEN.:	02
INPUT LEVEL GAIN:	05	INPUT LEVEL GAIN:	05
SILENCE SUPPRESSION:	00	SILENCE SUPPRESSION:	00
LOCAL INTERFACE TYPE:	FXO	LOCAL INTERFACE TYPE:	FXO
GROUND/LOOP START (FXS):	N/A	GROUND/LOOP START (FXS):	N/A
2 OR 4 WIRE (E&M):	2 WIRE	2 OR 4 WIRE (E&M):	2 WIRE
DIALTONE/WINK (E&M):	N/A	DIALTONE/WINK (E&M):	N/A
WINK TIMER (E&M)	N/A	WINK TIMER (E&M)	N/A
REMOTE INTERFACE TYPE:	FXS	REMOTE INTERFACE TYPE:	FXS
GROUND/LOOP START (FXS):	LOOP	GROUND/LOOP START (FXS):	LOOP
2 OR 4 WIRE (E&M):	2 WIRE	2 OR 4 WIRE (E&M):	2 WIRE
DIALTONE/WINK (E&M):	N/A	DIALTONE/WINK (E&M):	N/A

Configuration 4 Local Site Voice/Fax Channel Parameters

The remote site is configured for an FXS configuration on both voice/fax channels using the **V1LIFXS** and **V2LIFXS** commands and setting the Remote Interface type for an FXO configuration using the **V1RIFXO** and **V1RIFXO**

commands. Whether the second voice/fax channel is used depends on whether one or two instruments (telephone or fax machine) are connected. The parameters for the remote site can be displayed using the VL (List the Voice/Fax Channel Parameters) command. The voice/fax channel parameters for the remote site are shown in the Configuration 4 Remote Site Voice/Fax Channel Parameters. The voice/fax channel parameters are described in Chapter 5 Commands of this manual.

LOCAL VOICE/FAX PARAMETERS CHANNEL1 LOCAL VOICE/FAX PARAMTERS CHANNEL 2

PARAMETER	STATUS	PARAMETER	STATUS
DESTINATION CHANNEL:	01	DESTINATION CHANNEL:	02
DESTINATION NODE:	01	DESTINATION NODE:	01
LINK A/B/D:	A	LINK A/B/D:	A
DIGITIZING RATE:	16000	DIGITIZING RATE:	16000
OUTPUT LEVEL ATTEN.:	09	OUTPUT LEVEL ATTEN.:	09
INPUT LEVEL GAIN:	06	INPUT LEVEL GAIN:	06
SILENCE SUPPRESSION:	00	SILENCE SUPPRESSION:	00
LOCAL INTERFACE TYPE:	FXS	LOCAL INTERFACE TYPE:	FXS
GROUND/LOOP START (FXS):	LOOP	GROUND/LOOP START (FXS):	LOOP
2 OR 4 WIRE (E&M):	2 WIRE	2 OR 4 WIRE (E&M):	2 WIRE
DIALTONE/WINK (E&M):	N/A	DIALTONE/WINK (E&M):	N/A
WINK TIMER (E&M)	N/A	WINK TIMER (E&M)	N/A
REMOTE INTERFACE TYPE:	FXO	REMOTE INTERFACE TYPE:	FX0
GROUND/LOOP START (FXS):	N/A	GROUND/LOOP START (FXS):	N/A
2 OR 4 WIRE (E&M):	2 WIRE	2 OR 4 WIRE (E&M):	2 WIRE
DIALTONE/WINK (E&M):	N/A	DIALTONE/WINK (E&M):	N/A

Configuration 4 Remote Site Voice/Fax Channel Parameters

2.6
Configuration 5

Configuration 5 is the data/voice/fax configuration with two MultiMux MMV1608C/56/V multiplexers with single composite link connecting a minicomputer and a PBX trunk at the local site to a group of remote terminals and printer on the data part of the network and a second PBX trunk on the voice/fax channels. The E&M configuration is shown in Figure 2-5. In this configuration the data communications is set up per configurations 1, 2, or 3.
This configuration has the MV2 Voice/Fax board installed in the MMV1608/56/V multiplexers for the voice over data communications. The local site has VOICE/FAX CHANNEL 1 E&M connector on the back panel of the local multiplexer connected to a PBX E&M trunk. The same connection is made at the remote site.

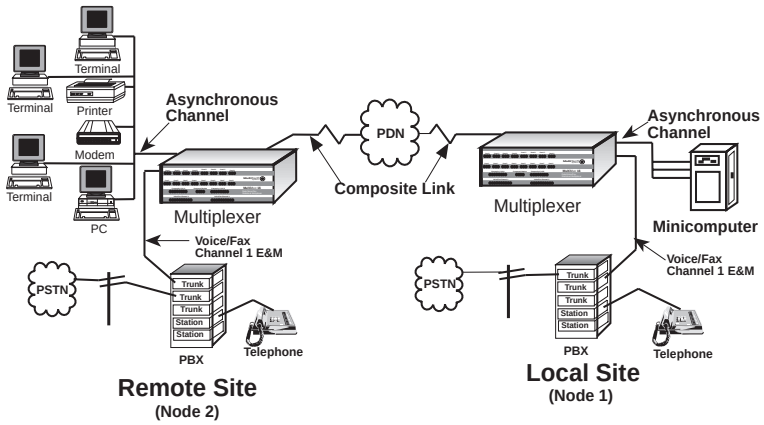

Figure 2-5. Configuration 5 (E&M I-V)

Both sites are configured for an E&M configuration on voice/fax channel 1 using the **V1LIE&M1W4** command and setting the Remote Interface type for the same thing using the **V1RIE&M1W4** command. The E&M connections can be to either voice/fax channel. The parameters for local voice/fax channels can be displayed using the **VL** (List the voice/fax channel parameters) command. The voice/fax channel parameters for the local and remote configurations are shown in Configuration 5 Voice/Fax Channel Parameters. The voice/fax channel parameters are described in Chapter 5 Commands of this manual.

LOCAL VOICE/FAX PARAMETERS CHANNEL1 LOCAL VOICE/FAX PARAMTERS CHANNEL 2

PARAMETER	STATUS	PARAMETER	STATUS
DESTINATION CHANNEL:	01	DESTINATION CHANNEL:	02
DESTINATION NODE:	02	DESTINATION NODE:	02
LINK A/B/D:	A	LINK A/B/D:	A
DIGITIZING RATE:	16000	DIGITIZING RATE:	16000
OUTPUT LEVEL ATTEN.:	14	OUTPUT LEVEL ATTEN.:	14
INPUT LEVEL GAIN:	05	INPUT LEVEL GAIN:	05
SILENCE SUPPRESSION:	00	SILENCE SUPPRESSION:	00
LOCAL INTERFACE TYPE:	E&M 1	LOCAL INTERFACE TYPE:	E&M 1
GROUND/LOOP START (FXS):	N/A	GROUND/LOOP START (FXS):	N/A
2 OR 4 WIRE (E&M):	4 WIRE	2 OR 4 WIRE (E&M):	4 WIRE
DIALTONE/WINK (E&M):	WINK	DIALTONE/WINK (E&M):	WINK
WINK TIMER (E&M)	100	WINK TIMER (E&M)	100
REMOTE INTERFACE TYPE:	E&M 1	REMOTE INTERFACE TYPE:	E&M 1
GROUND/LOOP START (FXS):	N/A	GROUND/LOOP START (FXS):	N/A
2 OR 4 WIRE (E&M):	4 WIRE	2 OR 4 WIRE (E&M):	4 WIRE
DIALTONE/WINK (E&M):	WINK	DIALTONE/WINK (E&M):	WINK

Configuration 5 Local site Voice/Fax Channel Parameters

LOCAL VOICE/FAX PARAMETERS CHANNEL1		LOCAL VOICE/FAX PARAMTERS CHANNEL 2	
PARAMETER	**STATUS**	**PARAMETER**	**STATUS**
DESTINATION CHANNEL:	01	DESTINATION CHANNEL:	02
DESTINATION NODE:	01	DESTINATION NODE:	01
LINK A/B/D:	A	LINK A/B/D:	A
DIGITIZING RATE:	16000	DIGITIZING RATE:	16000
OUTPUT LEVEL ATTEN.:	14	OUTPUT LEVEL ATTEN.:	14
INPUT LEVEL GAIN:	05	INPUT LEVEL GAIN:	05
SILENCE SUPPRESSION:	00	SILENCE SUPPRESSION:	00
LOCAL INTERFACE TYPE:	E&M 1	LOCAL INTERFACE TYPE:	E&M 1
GROUND/LOOP START (FXS):	N/A	GROUND/LOOP START (FXS):	N/A
2 OR 4 WIRE (E&M):	4 WIRE	2 OR 4 WIRE (E&M):	4 WIRE
DIALTONE/WINK (E&M):	WINK	DIALTONE/WINK (E&M):	WINK
WINK TIMER (E&M)	100	WINK TIMER (E&M)	100
REMOTE INTERFACE TYPE:	E&M 1	REMOTE INTERFACE TYPE:	E&M 1
GROUND/LOOP START (FXS):	N/A	GROUND/LOOP START (FXS):	N/A
2 OR 4 WIRE (E&M):	4 WIRE	2 OR 4 WIRE (E&M):	4 WIRE
DIALTONE/WINK (E&M):	WINK	DIALTONE/WINK (E&M):	WINK

Configuration 5 Remote Site Voice/Fax Channel Parameters

2.7
Configuration 6

Configuration 6 is the data/voice/fax configuration with two MultiMux MMV1608C/56/V multiplexers with single composite link connecting a minicomputer and a telephone and/or fax machine at the local site to a group of remote terminals and printer on the data part of the network and a second set of telephone and/or fax machine on the voice/fax channels. The FXS to FXS configuration is shown in Figure 2-6. In this configuration the data communications is set up per configuration 1.
This configuration has the MV2 Voice/Fax board installed in the MMV1608/56/V multiplexers for the voice over data communications. Both sites have the MV2 Voice/Fax boards connecting VOICE/FAX CHANNEL 1and/or 2 FXS connector(s) on the back panel of the multiplexer to either a telephone and/or a fax machine or both.

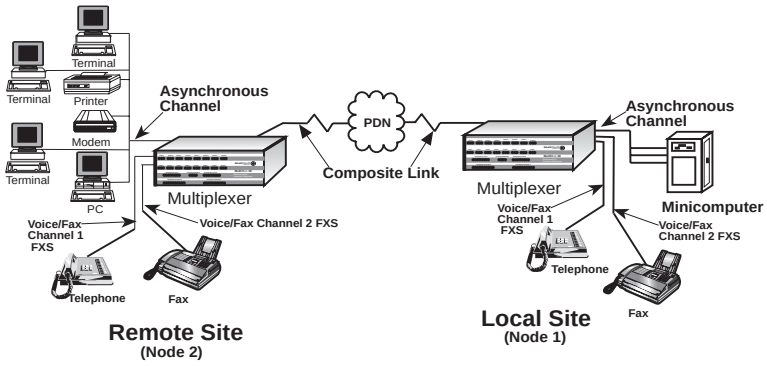

Figure 2-6. Configuration 6 (FXS to FXS)

Both sites are configured for an FXS configuration on voice/fax channel 1and/or 2 using the **V1LIFXS** command and/or **V2LIFXS** command and setting the Remote Interface type for the same thing using the **V1RIFXS** and/or **V2RIFXS**. The parameters for local voice/fax channels can be displayed using the **VL** (List the voice/fax channel parameters) command. The voice/fax channel parameters are shown in Configuration 6 Voice/Fax Channel Parameters. The voice/fax channel parameters are described in Chapter 5 Commands of this manual.

LOCAL VOICE/FAX PARAMETERS CHANNEL1 LOCAL VOICE/FAX PARAMTERS CHANNEL 2

PARAMETER	STATUS	PARAMETER	STATUS
DESTINATION CHANNEL:	01	DESTINATION CHANNEL:	02
DESTINATION NODE:	02	DESTINATION NODE:	02
LINK A/B/D:	A	LINK A/B/D:	A
DIGITIZING RATE:	16000	DIGITIZING RATE:	16000
OUTPUT LEVEL ATTEN.:	12	OUTPUT LEVEL ATTEN.:	12
INPUT LEVEL GAIN:	03	INPUT LEVEL GAIN:	03
SILENCE SUPPRESSION:	00	SILENCE SUPPRESSION:	00
LOCAL INTERFACE TYPE:	FXS	LOCAL INTERFACE TYPE:	FXS
GROUND/LOOP START (FXS):	LOOP	GROUND/LOOP START (FXS):	LOOP
2 OR 4 WIRE (E&M):	2 WIRE	2 OR 4 WIRE (E&M):	2 WIRE
DIALTONE/WINK (E&M):	N/A	DIALTONE/WINK (E&M):	N/A
WINK TIMER (E&M)	N/A	WINK TIMER (E&M)	N/A
REMOTE INTERFACE TYPE:	FXS	REMOTE INTERFACE TYPE:	FXS
GROUND/LOOP START (FXS):	LOOP	GROUND/LOOP START (FXS):	LOOP
2 OR 4 WIRE (E&M):	2 WIRE	2 OR 4 WIRE (E&M):	2 WIRE
DIALTONE/WINK (E&M):	N/A	DIALTONE/WINK (E&M):	N/A

Configuration 6 Local Site Voice/Fax Channel Parameters

LOCAL VOICE/FAX PARAMETERS CHANNEL1		LOCAL VOICE/FAX PARAMTERS CHANNEL 2	
PARAMETER	**STATUS**	**PARAMETER**	**STATUS**
DESTINATION CHANNEL:	01	DESTINATION CHANNEL:	02
DESTINATION NODE:	01	DESTINATION NODE:	01
LINK A/B/D:	A	LINK A/B/D:	A
DIGITIZING RATE:	16000	DIGITIZING RATE:	16000
OUTPUT LEVEL ATTEN.:	12	OUTPUT LEVEL ATTEN.:	12
INPUT LEVEL GAIN:	03	INPUT LEVEL GAIN:	03
SILENCE SUPPRESSION:	00	SILENCE SUPPRESSION:	00
LOCAL INTERFACE TYPE:	FXS	LOCAL INTERFACE TYPE:	FXS
GROUND/LOOP START (FXS):	LOOP	GROUND/LOOP START (FXS):	LOOP
2 OR 4 WIRE (E&M):	2 WIRE	2 OR 4 WIRE (E&M):	2 WIRE
DIALTONE/WINK (E&M):	N/A	DIALTONE/WINK (E&M):	N/A
WINK TIMER (E&M)	N/A	WINK TIMER (E&M)	N/A
REMOTE INTERFACE TYPE:	FXS	REMOTE INTERFACE TYPE:	FXS
GROUND/LOOP START (FXS):	LOOP	GROUND/LOOP START (FXS):	LOOP
2 OR 4 WIRE (E&M):	2 WIRE	2 OR 4 WIRE (E&M):	2 WIRE
DIALTONE/WINK (E&M):	N/A	DIALTONE/WINK (E&M):	N/A

Configuration 6 Remote Site Voice/Fax Channel Parameters

2.8
Configuration 7

Configuration 7 is the data/voice/fax configuration with two MultiMux MMV1608C/56/V multiplexers with single composite link connecting a minicomputer and a PBX E&M trunk at the local site to a group of remote terminals and printer on the data part of the network and a telephone and/or fax machine on the remote voice/fax channels. The E&M to FXS configuration is shown in Figure 2-7. In this configuration the data communications is set up per configuration 1. This configuration has the MV2 Voice/Fax board installed in the MMV1608/56/V multiplexers for the voice over data communications. The local site has the MV2 Voice/Fax board connecting VOICE/FAX CHANNEL 1and/or 2 E&M connector(s) on the back panel of the local multiplexer to a PBX E&M trunk. At the remote site the MV2 Voice/Fax board is connecting VOICE/FAX CHANNEL 1 and/or 2 FXS connector(s) on the back panel of the remote multiplexer to a telephone and/or a fax machine on the second channel.

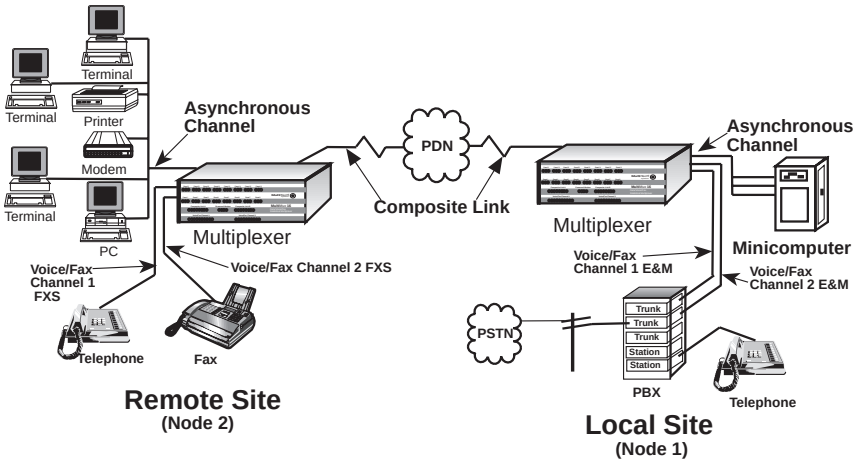

Figure 2-7. Configuration 7 (E&M I-V to FXS)

The local site is configured for an E&M configuration on both voice/fax channels using the **V1LIE&M2D4** command for channel 1 and **V2LIE&M2D4)** command for channel 2 and setting the Remote Interface type for an FXS configuration using the **V1RIFXS** and or **V2RIFXS** commands depending on whether one or both of the remote voice/fax channels are used. The parameters for the local and remote voice/fax channels can be displayed using the **VL** (List the voice/fax channel parameters) command. The voice/fax channel parameters are shown in Configuration 7 Voice/Fax Channel Parameters. The voice/fax channel parameters are described in Chapter 5 Commands of this manual.

LOCAL VOICE/FAX PARAMETERS CHANNEL1 LOCAL VOICE/FAX PARAMTERS CHANNEL 2

PARAMETER	STATUS	PARAMETER	STATUS
DESTINATION CHANNEL:	01	DESTINATION CHANNEL:	02
DESTINATION NODE:	02	DESTINATION NODE:	02
LINK A/B/D:	A	LINK A/B/D:	A
DIGITIZING RATE:	16000	DIGITIZING RATE:	16000
OUTPUT LEVEL ATTEN.:	14	OUTPUT LEVEL ATTEN.:	14
INPUT LEVEL GAIN:	05	INPUT LEVEL GAIN:	05
SILENCE SUPPRESSION:	00	SILENCE SUPPRESSION:	00
LOCAL INTERFACE TYPE:	E&M 2	LOCAL INTERFACE TYPE:	E&M 2
GROUND/LOOP START (FXS):	N/A	GROUND/LOOP START (FXS):	N/A
2 OR 4 WIRE (E&M):	4 WIRE	2 OR 4 WIRE (E&M):	4 WIRE
DIALTONE/WINK (E&M):	DIAL	DIALTONE/WINK (E&M):	DIAL
WINK TIMER (E&M)	N/A	WINK TIMER (E&M)	N/A
REMOTE INTERFACE TYPE:	FXS	REMOTE INTERFACE TYPE:	FXS
GROUND/LOOP START (FXS):	LOOP	GROUND/LOOP START (FXS):	LOOP
2 OR 4 WIRE (E&M):	2 WIRE	2 OR 4 WIRE (E&M):	2 WIRE
DIALTONE/WINK (E&M):	N/A	DIALTONE/WINK (E&M):	N/A

Configuration 7 Local Site Voice/Fax Channel Parameters

LOCAL VOICE/FAX PARAMETERS CHANNEL1		LOCAL VOICE/FAX PARAMTERS CHANNEL 2	
PARAMETER	**STATUS**	**PARAMETER**	**STATUS**
DESTINATION CHANNEL:	01	DESTINATION CHANNEL:	02
DESTINATION NODE:	01	DESTINATION NODE:	01
LINK A/B/D:	A	LINK A/B/D:	A
DIGITIZING RATE:	16000	DIGITIZING RATE:	16000
OUTPUT LEVEL ATTEN.:	12	OUTPUT LEVEL ATTEN.:	12
INPUT LEVEL GAIN:	03	INPUT LEVEL GAIN:	03
SILENCE SUPPRESSION:	00	SILENCE SUPPRESSION:	00
LOCAL INTERFACE TYPE:	FXS	LOCAL INTERFACE TYPE:	FXS
GROUND/LOOP START (FXS):	LOOP	GROUND/LOOP START (FXS):	LOOP
2 OR 4 WIRE (E&M):	2 WIRE	2 OR 4 WIRE (E&M):	2 WIRE
DIALTONE/WINK (E&M):	N/A	DIALTONE/WINK (E&M):	N/A
WINK TIMER (E&M)	N/A	WINK TIMER (E&M)	N/A
REMOTE INTERFACE TYPE:	E&M 2	REMOTE INTERFACE TYPE:	E&M 2
GROUND/LOOP START (FXS):	N/A	GROUND/LOOP START (FXS):	N/A
2 OR 4 WIRE (E&M):	4 WIRE	2 OR 4 WIRE (E&M):	4 WIRE
DIALTONE/WINK (E&M):	DIAL	DIALTONE/WINK (E&M):	DIAL

Configuration 7 Remote Site Voice/Fax Channel Parameters

2.9
Configuration 8

Configuration 8 is a LAN to LAN configuration with two MultiMux MMV1608C/56/V multiplexers with a single composite link. The muxes are connecting two local area networks (LANs) through the Sync Data Channel, connecting a communications server on one LAN to a minicomputer at a remote site and connecting voice/fax communications between the two locations. The LAN to LAN configuration is shown in Figure 2-8.
This configuration has the two LANs bridged together using bridges connected through the Sync Data Channel, the async channels of communications server on one LAN are connected to a minicomputer at the other LAN, and voice/ fax communications is provided between the LANs. The external bridges are connected to the COMPOSITE LINK B RS232C/V.35 connector on the back panel of both MultiMuxes, the async channels of the communications server are tied through the CHANNEL connectors to the minicomputer at the other end, and the VOICE/FAX CHANNEL 1and/or 2 E&M connector(s) on the back panel of both multiplexers are connected to a PBX E&M trunk. The muxes are configured so that the COMPOSITE LINK B RS232 connector is the synchronous data port.

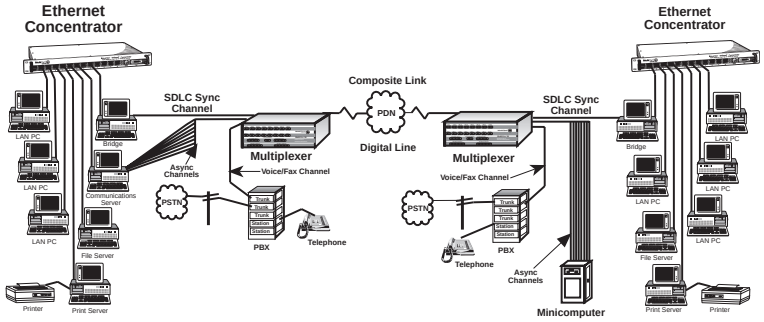

Figure 2-8. Configuration 8 (LAN to LAN)

The bridging of the two LANs is provided by the synchronous connection between the two LAN bridges. This allows any LAN pc on one LAN to communicate with any LAN pc on the other LAN. The async channels of the communications server on one LAN are connected to a minicomputer at the other LAN. In this configuration, the voice/ fax communications are set up per configuration 5.
To configure the Sync Data Channel, the **$MUXBSYNC** command sets Composite Link B for sync data. The parameters for the default configuration of Port A and Port B can be displayed by entering **$L** command. The default configuration for Port A and Port B is shown in the example below.

CONFIGURATION OF PORT A: COMPOSITE LINK

DSU TYPE	SPEED	CLOCKING	LOOPBACK
EXTERNAL	56K	INTERNAL	OFF

CONFIGURATION OF PORT B: SYNC DATA

PROTOCOL	SPEED	CLOCKING	LOOPBACK
ANY SDLC	56K	INTERNAL	OFF

Chapter 3 -

4.1
Introduction

This chapter explains how to unpack and install your MultiMux cabinet.

4.2
Unpacking

Unpack and check all the items in the MultiMux shipping list to ensure that you have received the correct options and accessories.

MultiMux Components

A. MultiMux Cabinet
B. Owner's Manual
C. Power cord
D. RJ48 phone cable (for internal DSU)
E. RJ11 phone cable (for internal modem)
F. Composite Link cable (for external link device)
G. E&M (I-V) Voice/Fax Channel cable (2)

Inspect the MultiMux cabinet for visible shipping damage. If damage is observed, do not power-on the unit; contact Multi-Tech's Tech Support for advice (refer to Chapter 8). If no damage is observed, place the MultiMux cabinet in its final location.

Save the packing material for possible future use (e.g., return or relocation).

4.3
Installation Procedure

The installation procedure is organized to cable the MultiMux first, then, if a V.35 interface is used, procedures on how move the V.24/V35 shunt from its default position to the V.35 position, and finally how to configure the MultiMux. The cabling procedure is provided in Table 4-1. The V.35 interface procedure is provided in Table 4-2. How to configure the MultiMux is provided in Table 4-3.

Table 4-1. Cabling Procedure

Step	Procedure
Composite Link	
1	**Internal DSU on Port A or B - Composite Link** If your MultiMux has internal DSU(s), connect the RJ48 cable shipped with your MultiMux to the COMPOSITE LINK A or B INTERNAL DSU connector(s) on the back panel of the MultiMux and to your phone line. Proceed to cabling either the sync data channel or the async channels.

Table 4-1. Cabling Procedure

Step	Procedure

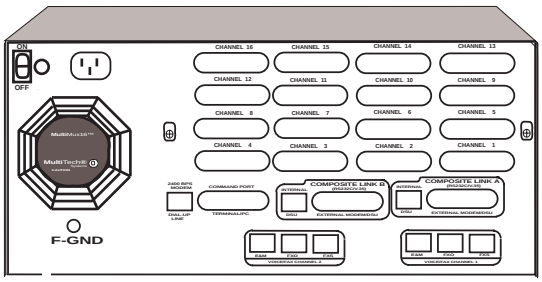

Figure 4-1. Back Panel

External Modem/DSU with RS232C Interface

If either composite link is being connected to an external modem or DSU with an RS232C interface, connect the composite link cable shipped with your MultiMux to the COMPOSITE LINK A or B (RS232C/V.35) EXTERNAL MODEM/DSU connector(s) on the back panel and to the RS232 connector on the external link device(s). Proceed to cabling either the sync data channel or the async channels.

External Modem/DSU with V.35 Interface

If either composite link is being connected to an external modem or DSU with a V.35 interface, refer to Table 4-2 to change the position of the V.24/V.35 shunt. Proceed to cabling either the sync data channel or the async channels.

Sync Data Channel - Port B only

If Port B is being connected to a synchronous device, connect the back-to-back cable supplied with your MultiMux to the COMPOSITE LINK B (RS232C/V.35) EXTERNAL MODEM/DSU connector on the back panel of the MultiMux and the other end of the cable to the RS232C connector on the synchronous device. Refer to the synchronous device documentaiton for this connection.

Async Channel

2 Route and connect your channel devices to the MultiMux back panel CHANNEL 1 - CHANNEL 16 for a MultiMux MMV1616 or CHANNEL 1 - CHANNEL 32 for a MultiMux MMV3232 connectors using RS232 cables.

Note

Any cables connected to the computer should be shielded to reduce interference.

Table 4-1. Cabling Procedure

Step	Procedure
	Follow channel device guidelines regarding RS232 cable lengths and make sure that the pin assignment in Appendices B and C of this manual are followed.
Voice/Fax Channels	
3	If the Voice/fax board is being connected to the trunk side of a PBX, connect the E&M (I-V) Voice/fax Channel cable supplied with your MultiMux between the VOICE/FAX CHANNEL 1 or 2 E&M connector on the back panel of the MultiMux and the PBX. Configuration 5 (E&M I-V) and configuration 7 (E&M I-V to FXS) are examples of E&M connections and are described in Chapter 2 of this manual.
	Connect the RJ45 connector of this cable to either VOICE/FAX CHANNEL 1 E&M connector on the back panel of the MultiMux or to VOICE/FAX CHANNEL 2 E&M connector on the MultiMux. Pin assignments for this cable are described in Appendix D.
	Connect the spade lug end of this cable to the trunk side of the PBX. Refer to the PBX manual for this connection.
	Note If the spade lugs are not needed on the PBX end, they may be cut off the cable.
4	If the Voice/fax board is being connected to the station side of a PBX, connect an RJ11 phone cable between the VOICE/FAX CHANNEL 1 or 2 FXO connector on the back panel of the MultiMux and to the station side of the PBX. Configuration 4 (FXO to FXS) is a example of this connection and is described in Chapter 2 of this manual. Refer to the PBX manual for the station side connection.
5	If the Voice/fax board is being connected to a station instrument (telephone, KTS-key telephone system, or fax machine), connect one end of an RJ11 phone cable to either the VOICE/FAX CHANNEL 1 or 2 FXS connector on the back panel of the MultiMux and the other end to the station instrument. Configuration 6 (FXS to FXS) is an example of this connection and is described in Chapter 2 of this manual.
6	Perform the configuration procedures in Table 4-3.

Table 4-2. V.35 Interface

Step	Procedure
1	If either composite link is being connected to an external modem or DSU with a V.35 interface, loosen the four quarter-turn-fasteners on the front panel and remove the front panel.

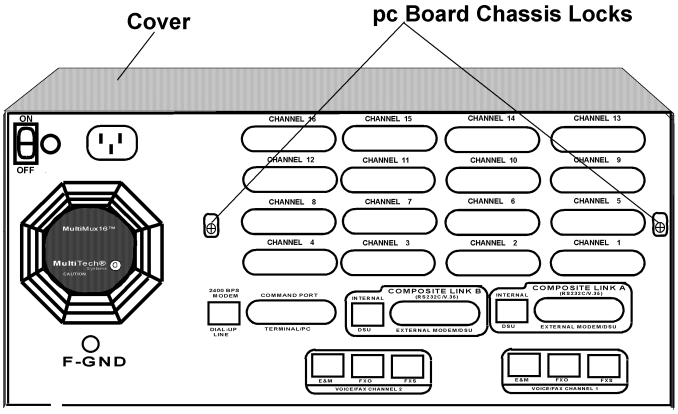

Figure 4-2. Composite Link Cabling

2 Loosen the two pc board chassis lock screws on the back panel. See Figure 4-2.

3 Pry up on the two pc board chassis lock screws to unlock the pc boards in the chassis. Temporarily retighten these screws while in the up position.

4 Disconnect the pc board power cable from the power supply. See Figure 4-3.

5 Partially pull out all the pc boards in the chassis just past the inside edge of the data and address ribbon cable connectors. It may require a slight forward tug on the voice/fax board (if installed) to free it from its board edge connector while pulling the other boards forward.

6 Disconnect the control ribbon cable from the Aggregate board.

7 Disconnect the data and address ribbon cable connector from the Aggregate board.

8 If the Voice/Fax board is in the chassis, remove the ribbon cable between the Aggregate board and the Voice/ Fax board.

Table 4-2. V.35 Interface (Cont.)

Step	Procedure

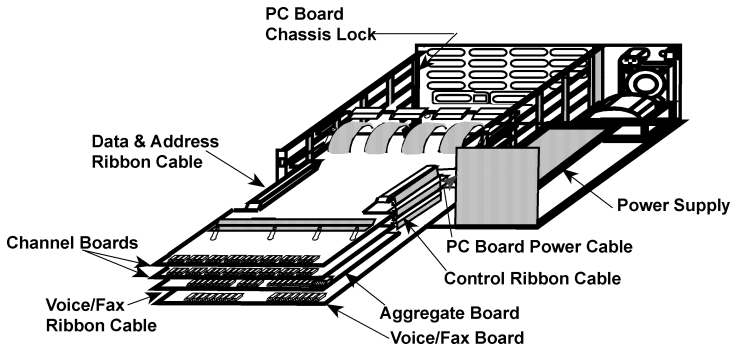

Figure 4-3. PC Board Removal

9 Remove the Aggregate board from the chassis.

10 On the Aggregate board, move the V.24/V.35 shunt for the composite link being connected from the V.24 position to the V.35 position. See Figure 4-4.

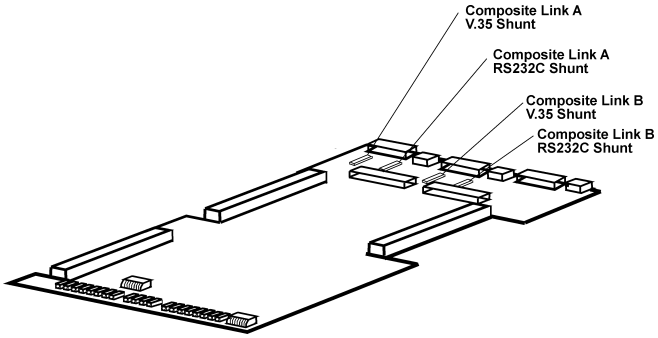

Figure 4-4. Shunts

11 Partially slide the Aggregate board into the chassis.

12 If the Voice/Fax board is in the chassis, connect the short ribbon cable between the Aggregate board and the Voice/Fax board. This ribbon cable goes on the front left side of the Aggregate board and is the only connector on the Voice/Fax board.

Table 4-2. V.35 Interface (Cont.)

Step	Procedure
13	Reconnect the control ribbon cable on the right side between the Aggregate board and the Channel board(s).

WARNING

Make sure the ribbon cables are not crimped and are tight or the entire MultiMux will be damaged when power is applied.

14 Reconnect the data and address ribbon cable on the left side between the Aggregate board and Channel Board(s).

15 Slide all the boards fully into the chassis. The Voice/Fax board (if installed) will require an extra push to seat it in its board edge connector.

16 Ensure that the boards are seated into the back panel.

17 Ensure that the pc board chassis locks will seat into the boards. Then loosen, pry down and retighten the screws.

Warning

Ensure that the power cable connector pins align with the connector on the power supply board and that the power cable connector has the locking notch facing upward. If the cable is misaligned in any way severe damage may occur to the unit.

18 Connect the pc board power cable to the power supply being careful that the pins are aligned properly. See Figure 4-3.

19 Replace the front panel securing it to the chassis with the four quarter-turn-fasteners.

20 Connect a V.35 interface adapter cable (Multi-Tech #90056210) to the COMPOSITE LINK A or B (RS232C/V.35) EXTERNAL MODEM/DSU connector(s) on the back panel and to the V.35 connector on the external link device(s).

Table 4-3. Configuration Procedure

Step	Procedure
1	Connect the AC power cord shipped with your MultiMux to the AC power connector on the back panel and to the AC outlet.
2	Place the power ON/OFF switch on the back panel of the MultiMux to the ON position to apply power.

Supervisory Console

3 If you are connecting a supervisory console to the MultiMux, connect a terminal or PC to the COMMAND PORT connector via an appropriate RS232C cable. The PC must be running communications software.

Note

Any cables connected to the computer should be shielded to reduce interference.

4 Apply power to the supervisory console and enter AT and then hit Return. If you get an OK message back, you are communicating with the Command Port. The Command Port operates at up to 19.2K bps.

Command Modem

5 To connect the built-in command modem to a standard phone line, connect the RJ11 cable to the 2400 BPS MODEM DIAL-UP LINE connector on the back panel of the MultiMux and the phone jack.

Composite Link

6 Verify that the FC channel LEDs on the front panel flash on for a few seconds and then go out.

7 Verify that the CD, RCV, XMT, CTS LEDs on the composite link (A or B) that you have connected are on and the RD LED goes off for that link. Proceed to configuring the Sync Data Channel or the Async Channels.

Note

This verifies that the composite link is up and working.

If the RD LED stays lit, the composite link device is not configured to communicate with the link, configure the internal DSU. Proceed to configuring the composite link.

If the XMT and CTS LEDs lite for composite link A or B and the RD LED goes off, the remote mux is not powered on or the remote DSU is not configured for the composite link. Proceed to configuring the composite link.

Table 4-3. Configuration Procedure

Step	Procedure

8 Enter the List Composite Link Configuration command (**$L**) to display the default configuration of Composite Link A and B. The display may appear as follows:

```
                CONFIGURATION OF PORT A: COMPOSITE LINK
DSU TYPE          SPEED   CLOCKING    LOOPBACK
EXTERNAL          128K    INTERNAL    OFF

                CONFIGURATION OF PORT B: COMPOSITE LINK
DSU TYPE          SPEED   CLOCKING    LOOPBACK
EXTERNAL          64K     INTERNAL    OFF
```

9 Based on the listed conditions for the composite links, reconfigure the parameters to match your actual composite link requirements by entering commands as described in Chapter 5.

As you change parameters, they will not actually be incorporated into your running system until you execute a Store New Parameters (**&W**) command.

Sync Data Channel - Port B only

10 To configure port B as the Synchronous Data Channel, enter **$MUXBSYNC** command.

11 Enter a Store Parameter (**&W**) command and then reset the MultiMux by entering a reset (**Z**) command or powering the MultiMux off and back on.

12 Enter **$L** command again to redisplay the configuration. The display appears as follows:

```
            CONFIGURATION OF PORT A: COMPOSITE LINK
DSU TYPE          SPEED   CLOCKING    LOOPBACK
EXTERNAL          56K     INTERNAL    OFF

            CONFIGURATION OF PORT B: SYNC DATA

PROTOCOL          SPEED   CLOCKING    LOOPBACK
ANY SDLC          56K     INTERNAL    OFF
```

13 Based on the listed conditions for the Sync Data Channel, reconfigure the parameters to match your actual Sync Data Channel requirements by entering commands as described in Chapter 5.

As you change parameters, they will not actually be incorporated into your running system until you execute a Store New Parameters (**&W**) command.

Table 4-3. Configuration Procedure

Step	Procedure

Async Channels

14 Execute the parameter display command to display the current channel parameter status for your local MultiMux by entering the following:

ATL (hit Return)

The following will be displayed on your supervisory console for a MultiMux MMV1616:

Local Channel Parameters/ Node # 00

CHN	SPD	WD	STP BIT	PAR	FLOW CTRL	ENQ/ ACK	ECHO	PACE	PASS EIA	PASS XON	DEST CHN	DEST NODE	LINK A/B
01	19200	8	1	NONE	CTS	OFF	OFF	OFF	OFF	OFF	01	01	A
02	19200	8	1	NONE	CTS	OFF	OFF	OFF	OFF	OFF	02	01	A
03	19200	8	1	NONE	CTS	OFF	OFF	OFF	OFF	OFF	03	01	A
04	19200	8	1	NONE	CTS	OFF	OFF	OFF	OFF	OFF	04	01	A
05	19200	8	1	NONE	CTS	OFF	OFF	OFF	OFF	OFF	05	01	A
06	19200	8	1	NONE	CTS	OFF	OFF	OFF	OFF	OFF	06	01	A
07	19200	8	1	NONE	CTS	OFF	OFF	OFF	OFF	OFF	07	01	A
08	19200	8	1	NONE	CTS	OFF	OFF	OFF	OFF	OFF	08	01	A
09	19200	8	1	NONE	CTS	OFF	OFF	OFF	OFF	OFF	09	01	A
10	19200	8	1	NONE	CTS	OFF	OFF	OFF	OFF	OFF	10	01	A
11	19200	8	1	NONE	CTS	OFF	OFF	OFF	OFF	OFF	11	01	A
12	19200	8	1	NONE	CTS	OFF	OFF	OFF	OFF	OFF	12	01	A
13	19200	8	1	NONE	CTS	OFF	OFF	OFF	OFF	OFF	13	01	A
14	19200	8	1	NONE	CTS	OFF	OFF	OFF	OFF	OFF	14	01	A
15	19200	8	1	NONE	CTS	OFF	OFF	OFF	OFF	OFF	15	01	A
16	19200	8	1	NONE	CTS	OFF	OFF	OFF	OFF	OFF	16	01	A

15 Based on the listed conditions for each channel, reconfigure the parameters to match your actual channel requirements by entering commands as described in Chapter 5.

As you change operational parameters, they will not actually be incorporated into your running system until you execute a Store New Parameters (**&W**) command.

Table 4-3. Configuration Procedure

Step	Procedure

Voice/Fax Channels

16 To display the current Voice/Fax channel parameters, enter the following:

ATVL (hit Return)

The following will be displayed on your supervisory console for the Voice/Fax channels:

LOCAL VOICE/FAX PARAMETERS CHANNEL 1

PARAMETER	STATUS
DESTINATION CHANNEL:	01
DESTINATION NODE:	02
LINK A/B/D:	A
DIGITIZING RATE:	16000
OUTPUT LEVEL ATTEN.:	12
INPUT LEVEL GAIN:	03
SILENCE SUPPRESSION:	00
LOCAL INTERFACE TYPE:	FXS
GROUND/LOOP START (FXS):	LOOP
2 OR 4 WIRE (E&M):	2 WIRE
DIALTONE/WINK (E&M):	N/A
WINK TIMER (E&M):	N/A
REMOTE INTERFACE TYPE:	FXS
GROUND/LOOP START (FXS):	LOOP
2 OR 4 WIRE (E&M):	2 WIRE
DIALTONE/WINK (E&M):	N/A

LOCAL VOICE/FAX PARAMETERS CHANNEL 2

PARAMETER	STATUS
DESTINATION CHANNEL:	02
DESTINATION NODE:	02
LINK A/B/D:	A
DIGITIZING RATE:	16000
OUTPUT LEVEL ATTEN.:	12
INPUT LEVEL GAIN:	03
SILENCE SUPPRESSION:	00
LOCAL INTERFACE TYPE:	FXS
GROUND/LOOP START (FXS):	LOOP
2 OR 4 WIRE (E&M):	2 WIRE
DIALTONE/WINK (E&M):	N/A
WINK TIMER (E&M):	N/A
REMOTE INTERFACE TYPE:	FXS
GROUND/LOOP START (FXS):	LOOP
2 OR 4 WIRE (E&M):	2 WIRE
DIALTONE/WINK (E&M):	N/A

17 Based on the listed conditions for the Voice/Fax channels, reconfigure the parameters to match your actual Voice/Fax channel requirements by entering commands as described in Chapter 5.

As you change parmeters, they will not actually be incorporated into your running system until you execute a Store New Parameters (**&W**) command.

5.1
Introduction

This chapter presents a command summary followed by a detailed description of each command used in the MultiMux. Each command line must begin with a prefix of AT and may contain any number of commands in a string (no spaces) up to a limit of 40 characters. Most commands include a value and are part of the 40 character total. Hitting Return executes a command line but does not incorporate it into the operation of your MultiMux. You must execute a Store New Parameters command (&W) to implement your changes into your mux network.
An example of a command line which changes the parameters of the channel device connected to channel 1is shown in the following example. The example changes the baud rate to 4800 bps, parity to odd, CTS flow control and turns echo off

ATC1B4800P1F1E0

Table 5-1 presents a summary of all the commands used in the MultiMux. The commands are divided into a number of general categories according to their functionality within the MultiMux. This functional division is carried on into the detailed description of each command.
The access commands for the command modem are described in this chapter. The general AT commands for the command modem are described in Appendix D.
The following functional grouping of the commands are listed with their paragraph title and paragraph number:

General Commands	5.2.1
Channel Parameter Commands	5.2.2
Composite Link Speed & Clocking commands	5.2.3
Additional Composite Link Commands	5.2.4
Voice/Fax Channel Commands	5.2.5
Test Commands	5.2.6
Command Modem Commands	5.2.7

Table 5-1. Command Summary

TYPE	COMMAND	DESCRIPTION
General	**H**	General Help
	H1	Channel Parameter Help
	H2	DIP-Switch Configuration Help
	H3	Composite Link Speed and Clocking Help
	H4	Additional Composite Link Help
	H5	Miscellaneous Help
	H6	Voice/Fax Channel Help
	H7	Additional Voice/Fax Channel Help
	Z	Reset
	&W	Store New Parameters to Memory
Channel	**B0**	Channel Off Command
Parameter	**Bxxx**	Baud Rate Select
	C0	Universal Channel Parameters Command
	C1-C32	Channel Select for Parameter Change
	DC	Destination Channel Selection
	DN	Destination Node Selection
	E0	Echo Off
	E1	Echo On
	F0	Flow Control Off
	F1	CTS (RS232C) Flow Control
	F2	Xon/Xoff Flow Control
	F3	Enq/Ack On
	F4	EnqAck Off
	F5	Pacing On
	F6	Pacing Off
	F7	Pass EIA (RS232C) Signals On
	F8	Pass EIA (RS232C) Signals Off
	F9	Xon Pass Thru On
	F10	Xon Pass Thru Off
	F11	Inverter DTR On
	F12	Inverter DTR Off
	F13	Xoff/First Character Pacing

	F14	Xoff/Xon Character Pacing
	I0-2	Identification Commands
	L,L0	List all Channel Parameters
	L1-L32	List individual Channel Parameters
	ML	Link Used Per Channel
	P0	Parity None
	P1	Parity Odd
	P2	Parity Even
	R	Response Time Priority
	SB	Stop Bit Selection
	SN	Local Source Node Number

Table 5-1. Command Summary (Cont.)

TYPE	COMMAND	DESCRIPTION
Channel Parameter (Cont.)	**SNGA..H**	Downline Load Source Number
	WL	Word Length
	&F	Load Factory Defaults
	&SL	Select Local Parameters
	&SR	Select Downline Parameters
	#S	Channel Statistics
Composite and Clock	**$DSUACL**	Selects Clocking for Internal DSU on Link A
	$DSUBCL	Selects Clocking for Internal DSU on Link B
	$DSUASP	Selects Speed of Internal DSU on Link A
	$DSUBSP	Selects Speed of Internal DSU on Link B
	$MUXACL	Selects Clocking when external DSU/ Modem for Port A
	$MUXBCL	Selects Clocking from external sync device for Port B
	$MUXASP	Speed of the Clocking if Supplied by the Multiplexer Port A
	$MUXBSP	Speed of the Clocking if Supplied by the Multiplexer Port B
	$MUXBSYNC	Selects Port B as Sync Data Channel
	$MUXBCOMP	Selects Port B as Composite Link
Additional Composite Link	**#C**	Clear Composite Statistics
	$F	Load Factory Defaults for DSU and ISCC
	#FT	Flush Timer Value
	$L	List Configuration of Port A and Port B
	#L	List Composite Link Settings
	#RB	Set Auto reporting Baud Rate
	#RT	Set Auto Reporting Time Interval
	#RXT	Programmable Retransmit Timer
	#S	Composite Link Statistics
	#SL	Status of Front Panel LEDs
Voice/Fax Channel	**VL**	List the Voice/Fax Channel Parameters
	V(1/2)Z	Reset Voice/Fax Channel
	V(1/2)DC	Voice/Fax Destination Channel
	V(1/2)DN	Voice/Fax Destination Node
	V(1/2)ML	Link the Voice/Fax Channel will Communicate Over
	V(1/2)DR	Voice/Fax Channel Digitizing Rate
	V(1/2)OL	Voice/Fax Channel Output Level Attentuation
	V(1/2)IL	Voice/Fax Channel Input Level Gain
	V(1/2)SS	Voice/Fax Silence Suppression

5-1. Command Summary (Cont.)

TYPE	COMMAND	DESCRIPTION
Additional Voice/Fax Channel	**V(1/2)LI**	Voice/Fax Channel Local Interface Type
	V(1/2)RI	Voice/Fax Channel Remote Interface Type
	V(1/2)WT	Voice/Fax Channel Wink Timer
Test	**&T1-3**	Memory Tests
	&T4	Local Loop

	&T5	Digital Loop
	&T6	Not Functional
	&T7	Switch and LEDs
	&T8	Memory Test
	&T9	Watch Dog Timer Test
	&T10	Internal Modem Memory Test
	&T11	Quick Brown Fox Message Test
	&T12	Voice/Fax Loopback Test
	&T13	Sync Data Channel Loopback Test
Command Modem	**A/**	Repeat Last Command
	A	Answer
	B	Communications Standard (Bell/CCITT)
	D	Dial
	E	Echo Command Mode Characters (On/Off)
	&F	Load Factory Defaults
	&G	Guard Tone
	H	Command Modem On/Off Hook
	I	Inquiry for Product Code
	#MA	Command Modem Select
	O	On Line
	P	Pulse Dial
	&Pn	Make-to-Break Ratio
	Q	Result Code
	R	Forcing an Answer Tone, in the Dialing
	Sn?	Read S-Register
	SN=xxx	Assign S-Register Value
	T	Tone Dial
	V	Result Codes (digit/word)
	&V	View Active Configuration and User Profiles
	W	Wait for Dial Tone
	&Wn	Store Active Profile
	X	Result Code Set/Call Progress
	&Yn	Select Stored Profile on Power Up
	Z	Recall Stored Profile

5-1. Command Summary (Cont.)

TYPE	COMMAND	DESCRIPTION
Command Modem (Cont.)	**&Zn=x**	Store Telephone Numbers
	0 to 9, A to D	Dial Digits/Characters
	@	Wait for Quiet Answer
	!	Flash Hook
	,	Automatic Pauses in Dialing
	;	Return to Command Mode after Dial Command Execution
	+++	Escape Sequences (entering command mode while still on-line)

5.2 *CommandDescription*

The following command descriptions explain the effect that executing each command has on your MultiMux network. Refer to Chapter 6 for instructions on how to execute the commands.

5.2.1 General Commands

Reset Z The Reset command will set the operating parameters of the MultiMux to its most recently stored values. Executing the Reset command performs the same function in the logic as turning power off and then on to the unit.

Store New Parameters

&W

The Store New Parameters command causes the MultiMux to store new parameters. Prior to executing the **&W** command, changes to MultiMux parameters are temporary and do not affect the unit's operation until you execute the **&W** command. The **&W** command stores the parameters in nonvolatile memory and will takes affect immediately.

Help

H

H1-H7

The Help commands are designed to give you short explanations on how to use MultiMux commands. They will be useful if your manual is not handy, although the explanations are quite short in comparison to those in the manual. When a Help command is executed in conjunction with some other command, the resulting display will explain options and information for that command. The General Help command provides information on the other MultiMux Help commands.

The H command menu is as follows:

General Help

1. Each command line must begin with the prefix AT.
2. Each command line may contain any number of commands up to 40 characters total.
3. Most command letters must be followed by a value.
4. For help on specific commands, enter "ATH" followed by the command letters.
5. For additional help menus, enter "ATH" followed by numbers 1-7.
   A. Type ATH or ATH0 for General Help.
   B. Type ATH1 for channel parameter commands.
   C. Type ATH2 to view the DIP switch configuration.
   D. Type ATH3 for composite link speed and clocking commands.
   E. Type ATH4 for additional composite link commands.
   F. Type ATH5 for miscellaneous commands.
   G. Type ATH6 for voice/fax channel commands.
   H. Type ATH7 for additional voice/fax channel commands.

The H1 menu is as follows:

CHANNEL PARAMETER COMMANDS

B	-	BAUD RATE SELECTION	P	-	PARITY SELECTION
C	-	CHANNEL SELECTION	R	-	RESPONSE TIME PRIORITY
DC	-	DEST. CHANNEL SELECTION	SB	-	STOP BIT SELECTION
DN	-	DEST. NODE SELECTION	SN	-	LOCAL SOURCE NODE NUMBER
E	-	LOCAL ECHO	SNGA..H	-	DOWNLINE LOAD SOURCE NODE NUMBER
F	-	FLOW CONTROL	#S	-	CHANNEL STATISTICS
&F	-	READ IN FACTORY DEFAULTS	&SL	-	SELECT LOCAL PARAMETERS
L	-	LIST PARAMETERS	&SR	-	SELECT DOWNLINE LOAD PARAMETERS
ML	-	LINK USED PER CHANNEL	WL	-	WORD LENGTH SELECTION

THE FOLLOWING EXAMPLE WILL SELECT CHANNEL 1 AND SET ITS BAUD RATE TO 2400 AND THE WORD LENGTH TO 8 BITS:

ATC1B2400WL8 <ENTER>

FOR HELP ON A SPECIFIC COMMAND, ENTER "ATH" FOLLOWED BY A COMMAND LETTER

The H2 menu is as follows:

MULTIMUX EIGHT POSITION DIP-SWITCH DEFINITIONS AND CONFIGURATIONS

	SWITCH 1	SWITCH 2	SWITCH 3	SWITCH 4	SWITCH 5	SWITCH 6	SWITCH 7	SWITCH 8
	INITIATE DWN LINE LOAD	DSU TYPE LINK A	DSU TYPE LINK B	8/16 CHANNEL	24/32 CHANNEL	REMOTE ACCESS		
UP =	ON	INTERNAL	INTERNAL	16/32	24/32CHAN	ENABLED		
DN =	OFF	EXTERNAL	EXTERNAL	8/24	8/16CHAN	DISABLED		

CURRENT SETTINGS:

DN	DN	DN	DN	DN	DN	DN	DN

The H3 menu is as follows:

COMPOSITE LINK CLOCKING AND SPEED COMMANDS

INTERNAL DSU

$DSUACL - SELECTS CLOCKING FOR INTERNAL DSU LINK A.
$DSUBCL - SELECTS CLOCKING FOR INTERNAL DSU LINK B.
$DSUASP - SELECTS SPEED FOR INTERNAL DSU LINK A.
$DSUBSP - SELECTS SPEED FOR INTERNAL DSU LINK B.

EXTERNAL DSU/MODEM

$MUXACL - SELECTS CLOCKING WHEN USING EXTERNAL DSU/MODEM PORT A.
$MUXBCL - SELECTS CLOCKING FROM EXTERNAL SYNC DEVICE ON PORT B.
$MUXASP - SPEED OF THE CLOCK IF SUPPLIED BY THE MULTIPLEXER PORT A.
$MUXBSP - SPEED OF THE CLOCK IF SUPPLIED BY THE MULTIPLEXER PORT B.
$MUXB - SELECTS PORT B AS SYNC DATA CHANNEL OR COMPOSITE LINK.

FOR HELP ON A SPECIFIC COMMAND, ENTER "ATH" FOLLOWED BY THE COMMAND LETTER.

EXAMPLE: ATH$DSUACL "ENTER"

The H4 menu is as follows:

ADDITIONAL COMPOSITE LINK COMMANDS

#C - CLEAR COMPOSITE STATISTICS
$F - LOAD FACTORY DEFAULTS FOR DSU AND ISCC
#FT - FLUSH TIMER VALUE
$L - LIST CONFIGURATION OF PORT A & B
#L - LIST COMPOSITE LINK SETTINGS
#RB - SET AUTO REPORTING BAUD RATE
#RT - SET AUTO REPORTING TIME INTERVAL
#RXT - PROGRAMMABLE RETRANSMIT TIMER
#S - COMPOSITE LINK STATISTICS
#SL - STATUS OF FRONT PANEL LEDS

FOR HELP ON A SPECIFIC COMMAND, ENTER “ATH” FOLLOWED BY A COMMAND LETTER.

The H5 menu is as follows:

MISCELLANEOUS COMMANDS

I - ID CODE
#MA - MODEM ACCESS FOR COMMAND MODEM
#RA - REMOTE ACCESS FOR COMMAND MODEM
&T - TEST MODES
&W - SAVE PARAMETERS "WRITE TO MEMORY"
Z - RESET MULTIMUX

FOR HELP ON A SPECIFIC COMMAND, ENTER “ATH” FOLLOWED BY A COMMAND LETTER.

The H6 menu is as follows:

VOICE/FAX CHANNEL COMMANDS

VL - LIST THE VOICE/FAX CHANNEL PARAMETERS
V(1/2)Z - RESET VOICE/FAX CHANNEL
V(1/2)DR - VOICE/FAX CHANNEL DIGITIZING RATE
V(1/2)DC - VOICE/FAX DESTINATION CHANNEL
V(1/2)DN - VOICE/FAX DESTINATION NODE
V(1/2)ML - LINK THE VOICE/FAX CHANNEL WILL COMMUNICATE OVER
V(1/2)OL - VOICE/FAX CHANNEL OUTPUT LEVEL ATTENTUATION
V(1/2)IL - VOICE/FAX CHANNEL INPUT LEVEL GAIN
V(1/2)SS - VOICE/FAX CHANNEL SILENCE SUPPRESSION

COMMAND EXAMPLE 1: ATV1DN2 - SETS THE DESTINATION NODE OF CHANNEL 1 TO 2.

FOR HELP ON A SPECIFIC COMMAND, ENTER “ATH” FOLLOWED BY A COMMAND LETTER.

The H7 menu is as follows:

ADDITIONAL VOICE/FAX CHANNEL COMMANDS

V(1/2)LI - VOICE/FAX CHANNEL LOCAL INTERFACE
V(1/2)RI - VOICE/FAX CHANNEL REMOTE INTERFACE
V(1/2)WT - VOICE/FAX CHANNEL WINK TIMER

COMMAND EXAMPLE : ATV2LIFXSL- SETS THE LOCAL INTERFACE OF CHANNEL 2 TO FXS WITH LOOP START.

FOR HELP ON A SPECIFIC COMMAND, ENTER "ATH" FOLLOWED BY A COMMAND LETTER.

5.2.2
Channel Parameter Commands

Channel Off Command

B0

The channel off command turns the selected channel off. This command turns off a particular channel or all channels depending on the command. This allows the more efficient use of the dynamically allocated buffers and allows the multiplexer to skip the scanning of unused channels.

Baud Rate Select

Bxxxx

The Bxxxxx command selects the bps rate on the indicated channel. The channel bps rate is from 300 bps to 19.2K bps

Universal Channel Parameters

CO

The Universal Channel Parameters command incorporates the commands that follow it (all prior to a Carriage Return) into all the channels. This allows you to change such conditions as baud rate, word length, parity and flow control on all channels by executing a single command.

Channel Select

C1-C32

The Channel Select command selects an individual channel on which subsequent commands can operate. The Channel Select command must precede any of the other commands but remains in effect until changed. This is so that a string of commands can be entered without preceding each one with a **Cxx** command.

Destination Channel Number

DCxx

The **DC** command specifies the destination channel to which the source channel is communicating. A specific channel can only communicate with one other channel. On multinode networks, this command must be entered at both channel locations specifying each other as destinations (channels can pass through six nodes to get to its destination). On point-to-point networks, this parameter can be downline loaded.

Destination Node Number

DNxx

The **DN** command specifies destination node of the channels to which the local source channels will connect. On multinode networks, this command must be entered at both channel locations specifying each other as destinations (channels can pass through six nodes to get to its destination). On point-to-point networks, this parameter can be down line loaded. For example, if some node in your network is assigned 01 as its number (a node where its SN command was SN01), you can communicate with the 01 location channels by executing a **DN01** command for the channels you want to communicate with node 1. At that point, your local channels will communicate with those at node 01.

Echo Command

E0-1

The **E0-E1** commands turn on and off the echoplex feature of the MultiMux. When the echo condition is on, the data entered on the channel keyboard is returned to the channel display. The purpose of this is so that in interactive operations an operator will not experience undue delays in seeing entered data appear on the monitor. When the echo condition is off, the keyboard data is not returned to the monitor. **E1** turns on echoplex and **E0** turns it off.

Flow Control Operations

F0-F2

Flow Control is the means by which data flow is controlled from the channel devices into the MultiMux. Flow Control is necessary when the data handling capacity of an individual channel cannot keep up with the volume of data sent to it. There are two types of flow control available on the MultiMux. The software based Xon/Xoff and hardware based Clear to Send (CTS). **F0** turns flow control off, **F1** selects CTS flow control, and **F2** selects Xon/Xoff flow control. The way channel devices control the data flow to them from the MultiMux is called Pacing (see Pacing command). The combination of Flow Control for regulating data from individual channel devices and pacing for regulating data to individual channel devices is how

data transfers are regulated so that no data is lost.

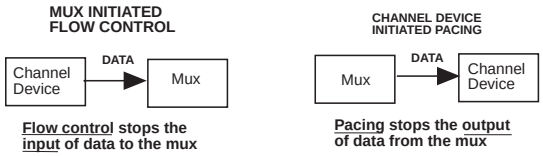

ENQ/ACK Flow Control

F3-F4

These two commands control the selection of a special flow control system used in Hewlett Packard computer systems. It is sometimes referred to as Enquire/Acknowledge flow control because it's based on the computer sending an inquiry (ENQ) and then expecting an acknowledgment (ACK). **F3** turns on this feature and **F4** turns off the feature.

Pacing Control

F5-F6

The Pacing Control command (**F5**-on, **F6**-off) is the means used to control data flow to channel devices. Pacing is necessary when devices operating on a mux channel require more than one character time to process the data, the pacing commands initiate control so that data is not lost in the transfer process. The MultiMux is shipped with pacing off and it will have to be turned On if your channel device cannot accommodate the data volume. The pacing method used is determined by the type of flow control.

Pass EIA Signals

F7-F8

The Pass EIA Signal commands **(F7**-on, **F8**-off) are the commands that enable or disable individual channels to receive EIA control signals through the MultiMux. Since in normal interactive operations, the existence of a multiplexer should be transparent to individual users, the Pass EIA Signals command will allow terminals to operate as if they were connected directly to a communications line and not through a multiplexer. This is done by allowing selected pins (signals) on one mux to be passed through to selected pins (signals) on a second remote mux. The following diagram shows how the Pass EIA Signals command routes the selected signals:

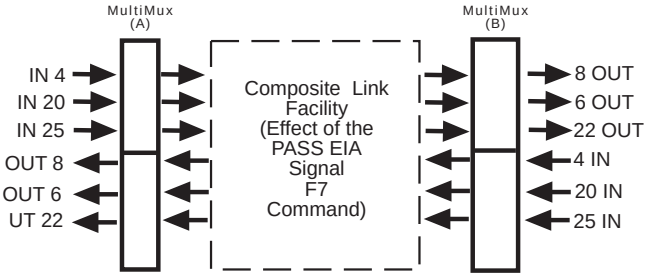

Pass Xon/Xoff

F9-F10

The Pass Xon/Xoff commands, (**F9**-enable, **F10**-disable), are active only if Xon/Xoff flow control is active. Also called the "Pass Through" commands, they enable or disable the MultiMux from passing through Xon/Xoff flow control signals. In the Enable mode, the MultiMux will obey the Xon/Xoff commands and pass them on to the channel device. When this command is enabled, a message "TO PREVENT DATA LOSS TO A PRINTER OR OTHER PERIPHERAL WE RECOMMEND USING FLOW CONTROL AND PACING, NOT PASS XON", is sent to the channel device. In the Disable mode, the MultiMux will obey the Xon/Xoff commands and not send them to the channel device. The default condition is for Xon/Xoff Pass Through to be disabled and it normally should remain disabled. However, in situations such as a slow data rate of a channel device, disabling the passing of Xon/Xoff signals may improve throughput by utilizing buffers in the mux.

Inverted DTR

The Inverted DTR Commands (**F11** and **F12**) work in conjunction with Pacing Control and change the way the MultiMux reacts to the DTR signal. With

Xon/Xoff Flow Control and Pacing, you will

F11-F12 end up with Xon/Xoff Pacing, and with CTS Flow Control plus Pacing, data flow will be controlled by the presence of the DTR (pin 20) signal on the RS232 interface. **F11** turns on Inverted DTR so that a high signal stops data flow and a low starts data flow. **F12** turns off Inverted DTR so that it acts normal (high on and low off). If Flow Control is off, Pacing cannot be turned on. If Pacing is off, inverted DTR cannot be turned on.

Xoff/First Char.

F13 is a special pacing command that is called X/off First Character pacing. Selecting **F13** causes the MultiMux to stop data flow to the channel device upon receipt of a Xoff Character.

F13-F14 The next character from the channel device will start data (it does not have to be an Xon Character). **F14** will turn off this feature.

Identification Commands

The Identification commands identify the type of MultiMux. This information is valuable when communicating with Multi-Tech's Technical Support personnel about your unit or its performance.

I0-2 The **I0** command identifies the product. The **I1** command indicates the Aggregate board firmware version. The **I2** command indicates the Voice/Fax firmware version.

List Channel Parameters

The List Channel Parameters command causes the MultiMux to display the condition of the parameters for each channel on the system's supervisory console as shown in the following example.

L-L0
L1-L32

To display the parameters for an individual channel, say channel three, you would enter **ATL3** and hit your Return key. To display the parameters for all of the channels, enter **ATL0** and then hit your Return key.

Local Channel Parameters/ Node # 01

CHN	SPD	STP WD	STP BIT	STP PAR	FLOW CTRL	ENQ/ ACK	ECHO	PACE	PASS EIA	PASS XON	DEST CHN	DEST NODE	LINK A/B
01	19200	8	1	NONE	CTS	OFF	OFF	OFF	OFF	OFF	01	02	A
02	19200	8	1	NONE	CTS	OFF	OFF	OFF	OFF	OFF	02	02	A
03	19200	8	1	NONE	CTS	OFF	OFF	OFF	OFF	OFF	03	02	A
04	19200	8	1	NONE	CTS	OFF	OFF	OFF	OFF	OFF	04	02	A
05	19200	8	1	NONE	CTS	OFF	OFF	OFF	OFF	OFF	05	02	A
06	19200	8	1	NONE	CTS	OFF	OFF	OFF	OFF	OFF	06	02	A
07	19200	8	1	NONE	CTS	OFF	OFF	OFF	OFF	OFF	07	02	A
08	19200	8	1	NONE	CTS	OFF	OFF	OFF	OFF	OFF	08	02	A
09	19200	8	1	NONE	CTS	OFF	OFF	OFF	OFF	OFF	09	02	A
10	19200	8	1	NONE	CTS	OFF	OFF	OFF	OFF	OFF	10	02	A
11	19200	8	1	NONE	CTS	OFF	OFF	OFF	OFF	OFF	11	02	A
12	19200	8	1	NONE	CTS	OFF	OFF	OFF	OFF	OFF	12	02	A
13	19200	8	1	NONE	CTS	OFF	OFF	OFF	OFF	OFF	13	02	A
14	19200	8	1	NONE	CTS	OFF	OFF	OFF	OFF	OFF	14	02	A
15	19200	8	1	NONE	CTS	OFF	OFF	OFF	OFF	OFF	15	02	A
16	19200	8	1	NONE	CTS	OFF	OFF	OFF	OFF	OFF	16	02	A

OK

Modem Link Used

This parameter specifies which link modem/DSU (link **A,** link **B** or **D**ynamic) each channel will use for data communications. Links should be load balanced so that heavy traffic channels are

MLA/B/D not all using the same link. The **MLD** command selects dynamic channel selection which permits the MultiMux to pick the least busy link per channel. When one channel is dynamic, all must be dynamic. Works only in point-to-point networks and both muxes must be set to **MLD**.

Parity Select

The Parity Select commands set the parity of MultiMux operations. Under normal operations (default conditions) parity is off and word length is set at eight bits. Since the MultiMux is

P0-2 intended to be transparent to channel device operation, this combination will pass parity information to the channel devices. The **P0** command turns parity off, **P1** sets odd parity and **P2** sets it at even.

Response Time Priority

The Response Time Priority command determines how long the mux will wait to send data from channel devices relative to each other. An **R0** setting is the shortest and **R3** the longest. The Response Time Priority commands ensure that channel

R operations which require heavy data transfers, such as program transmissions or print

operations, do not use too much of the buffer and reduce the throughput of the other channels to unsatisfactory levels. In such cases, the interactive user who needs immediate responses would experience unreasonable delays. The Response Time Priority numbers 0, 1, 2, 3 establish the relative time each group of channels must wait for data. The lower the number the shorter the wait. Since this is a channel group command, it does not control priority per channel but per group. For example, **C1R3** sets channel group 1 (channel 1 through 8) for a Response Time Priority 3. So, if you have channels within a group doing both interactive and batch work, the group must be set to an **R0** setting or the batch operation may utilize too much of the group's buffer resources. An **R3** number is the most efficient for throughput (allows more data to be assembled before sending a block).

Stop Bits

SB1
SB1.5
SB2

The Stop Bit commands set the number of stop bits used in asynchronous characters. The default condition is one stop bit **SB1**. An **SB1** command sets one, an **SB1.5** command sets 1.5, and an **SB2** command sets two stop bits.

Source Node Number

SN

The **SN** command specifies the node number of the local node. This number is determined by you and can be any decimal number up to 255. It should be assigned when you are designing your network and needs to be unique to any other node in your network. Remember that the node number selected will be used by other nodes (using a **DN**xxx command) when accessing the node. For example, if you assign 124 as the **SN** of a local node (**SN124** command), accessing that node from another node requires 124 in other nodes Destination Node number command (DN124).

Remote Source Group Select

SNGA..H

This command selects the Source Node Number for groups of four channels each:

Group	Channel	Default
A	1-4	01
B	5-8	01
C	9-12	01
D	13-16	01
E	17-20	01
F	21-24	01
G	25-28	01
H	29-32	01

The command is used when in point-to-point and multipoint (not networking) and when you are downline loading parameters. This command is active only when the Select Downline Load parameters command **&SR** has been selected. The format of this command is **SNGynnn** where y is the group letter and nnn is the source node number desired (any decimal digit up to 255). When the Voice/fax option is installed, the source node number range is 0 to 31.

Word Length Select

WL5-8

The Word Length Select commands set the word length for asynchronous communications. The selections available are 5, 6, 7, and 8 bits which correspond to **WL5** through **WL8.**

Load Factory Parameters

&F

The factory default command resets the MultiMux parameters to their original factory settings. They are as follows:

Channel Speed:	19200 bps
Word Length:	8 bits
Stop Bits:	One
Parity:	None
Flow Control:	XON/XOFF
Enq/Ack Control:	Off
Echo:	Off
Pacing:	Off
Pass EIA:	Off
Pass Xon/Xoff:	Off
Dest Node:	01
DSU Link:	A

Select Local Parameters
&SL

The Select Local Parameters command lists the local channel parameters and enables you to update them. After execution of this command, all other commands will act on the local parameter set. An **&W** command stores the parameters. When power is turned on, the local parameter mode is in effect.

Select Downline Load Parameters
&SR

The Select Downline Load Parameters command lists the remote mux channel parameters and enables you to update them. After execution of this command, all other commands will act on the downline parameter set. To send a new set of parameters to the remote MultiMux unit, 1) the Downline Load switch (8-position DIP switch SW1) must be set properly , 2) then executing an **ATZ** or powering off and on your unit sends the parameters to the remote mux.

Channel Status
#S1-S32

The Channel Status command displays the Individual channel percentage activity levels as well as the status of the EIA signals. The status message is displayed in the following format:

```
                    STATISTICS FOR CHANNEL NUMBER XX
RECEIVE FLOW CONTROL TIME  : 00 HRS   00 MIN      00 SEC
BUFFER UTILIZATION         : 00%
EIA STATUS:
PIN  #:  4/RTS   5/CTS   6/DSR   8/DCD  20/DTR   22/RI   25/OOS
TYPE :   INPUT  OUTPUT  OUTPUT  OUTPUT  INPUT  OUTPUT   INPUT
STATUS:  LO       HI      HI      HI      LO      LO       LO
```

5.2.3 Composite Link Speed and Clocking Commands

DSU Clock

The DSU Clock command allows the internal DSU to accept timing from it's internal timing oscillator (**$DSUACLI**) or from the **$DSUCL** DDS Network'sReceive Bipolar Signal. The **$DSUACLI** command enables the internal DSU on link A to establish the timing. DDS Clocking command **$DSUCLD** is used whenever the internal DSU is connected to DDS network line. The **$DSUCLD** command is the factory default and automatically configures the MultiMux clocking.

DSU Speed

The DSU Speed command sets the speed of the internal DSU. The **$DSUASP56000** command sets the internal DSU on link A **$DSUSP** to a link speed of 56K bps. The default DSU speed is 56K bps. The DSU speed commands are as follows:

$ D S U A /

BSP2400 $DSU/BSP4800
$DSUA/BSP9600 $DSUA/BSP19200
$DSUA/BSP56000

Mux Clock

The Mux Clock command enables the MultiMux to accept timing from either it's internal timing oscillator (**$MUXCLI**) or derive **$MUXCL** timing from a synchronous full-duplex external device (**$MUXCLE**). The **$MUXBCL** command is used any time an external link device is connected to the link or a synchronous device is connected to Port B as a Sync Data Channel. The **$MUXACLI** command configures link A for internal clocking. If the Sync Data Channel is configured, the **$MUXBCLI** command sets the MultiMux up for internal clocking. If the clocking is being provided by the synchronous device, the **$MUXBCLE** command would be used to set the clocking. The default condition for the MultiMux is internal clocking.

Mux Speed

The Mux Speed command selects the clocking speed when clocking is provided by the MultiMux. The only time the mux **$MUXSP** speed needs to be set is when the MultiMux is providing the clocking. The Mux Speed commands are used when the ports are set as composite link:

$MUXA/BSP 2400 $MUXA/BSP 4800 $MUXA/BSP 7200 $MUXA/BSP 9600 $MUXA/BSP 14400 $MUXA/BSP 19200
$MUXA/BSP 38400 $MUXA/BSP 57600 $MUXA/BSP 64000 $MUXA/BSP 76800 $MUXA/BSP115200 $MUXA/BSP 128000 $MUXA/BSP 256000

When the Sync Data Channel is used and the MultiMux is providing the clocking, a word of caution; the Mux Speed command should not be set so high that the Sync Data Channel over runs the composite link. Things to consider are that if a voice/fax board is installed, voice takes the highest priority (voice compression is either 9.6K or 16K of the bandwidth), the Sync Data Channel is the next highest priority and the speed should be set so that the remaining bandwidth for all the async channels does not override the composite link and there is sufficient bandwidth for the async channels.

When Port B is selected as a Sync Data Channel, the following Mux Speed commands are used:

$MUXBSP9600	$MUXBSP14400
$MUXBSP19200	$MUXBSP38400
$MUXBSP56000	$MUXBSP64000

Mux B The Mux B command causes Composite Link B (Port B) to operate as a Sync Data Channel or as a composite link. The **$MUXB** **$MUXBSYNC** command places Port B in a synchronous data channel mode. The **$MUXBCOMP** command sets Port B to operate as a composite link. When port B is in a sync data channel mode, the mux clocking and speed commands should be considered. The MultiMux must be reset for the command to take affect. The default condition is port B set as Composite Link B.

5.2.4 Additional Composite Link Commands

The Additional Composite Link commands perform the function of a system monitor. In addition to displaying the information available on the MultiMux's LED display, they also provide additional network statistical information. The purpose of the commands are to allow network monitoring via the supervisory port as an alternative to viewing the LED indicators. The various status commands and their functions are detailed below:

Clear Composite Statistics The Clear Composite Statistics command clears the composite statistics record without resetting the entire MultiMux unit. The **#CA** command clears link A composite statistics and **#CB** clears link B statistics.

#C

Load DSU Factory Defaults The Load DSU Factory Defaults command returns the status of the internal DSU to its original (default) status as shipped from the factory. The default conditions are as follows:

$F

Speed: 56K
Clock: DDS

Flush Timer Value This command is necessary when the mux is used with Alpha-Microcomputer and Wyse Terminals. The command allows for the proper use of the function keys as indicated on the keys. The **#FT** **#FT0** command clears the function and sets the flush time value to 10 msec and **#FT1** sets the flush time value to 20 msec. The default is **#FT0**.

List Composite Link Configuration The List Composite Link Configuration command causes the MultiMux to display its internal composite link or sync data channel parameters on the supervisory console. The following examples show the configuration of compoiste links A and B or composite link A and port B as a sync data channel. Composite link A is only used as a link connection, where as, composite link B (port B) can be used in a link configuration or as a synchronous data channel. The 8-position DIP switch SW2 on the Aggregate board configures link A for an external link device in the Closed (Down) position or internal DSU in the Open (Up) position. DIP Switch SW3 configures port B in the same manner when this link is used as a composite link. When port B is used as a sync data channel, DIP Switch SW3 has no affect. The first two examples show the configuration of ports A and B when the MultiMux is configured as composite links A and B. The next two examples show the composite link A as a link connection and port B as a synchronous data channel.

$L

CONFIGURATION OF PORT A: COMPOSITE LINK

DSU TYPE	SPEED	CLOCKING	LOOPBACK
EXTERNAL	128K	INTERNAL	OFF

CONFIGURATION OF PORT B: COMPOSITE LINK

DSU TYPE	SPEED	CLOCKING	LOOPBACK

EXTERNAL 64K INTERNAL OFF

CONFIGURATION OF PORT A: COMPOSITE LINK

DSU TYPE	SPEED	CLOCKING	LOOPBACK
EXTERNAL	56K	INTERNAL	OFF

CONFIGURATION OF PORT B: SYNC DATA

PROTOCOL	SPEED	CLOCKING	LOOPBACK
ANY SDLC	56K	INTERNAL	OFF

List Composite This command lists the status of the link configuration parameters. **Link Settings** The display indicates the conditions that affect the link's operation, such as the downline load, flush timer value and the response **#L** time setting. The default conditions are: inititate downline load is off, a flush timer value of 10ms and a response time set to R3.

LOCAL MULTIMUX COMPOSITE SETTINGS

INITIATE DOWNLINE LOAD	FLUSH TIMER	CHAN 1-8 RESPONSE TIME
OFF	10MS	3

Status Report Baud Rate This command sets the baud rate of the status report generated by the **#S0** command on the system supervisor console display. The speed options are as follows:

#RBxxxxx

#RB300 : 300 bps
#RB1200 : 1200 bps
#RB2400 : 2400 bps
#RB4800 : 4800 bps
#RB9600 : 9600 bps
#RB19200 : 19200bps

Status Report Time This command sets the time interval in hours at which the status report generated by the #S0 command is displayed on the system supervisor console display. The intervals are in hour **#RT0-99** increments from 1 to 99 hours, with **#RT0** being the off condition.

Programmable Retransmit Timer The Programmable Retransmit Timer **#RXT** command allows the user to set a maximum time limit on when an acknowledgement needs to be received from the remote MultiMux before the data **#RXT** block is retransmitted. The timer can be set for link A (**#RTXA4**) and link B. The range of the timer is between 4 and 12 seconds. The factory default value is 4 seconds.

Composite Link StatusReport This command generates a statistics report of the composite link for display on the system supervisor console. The composite link status report can be displayed for link A (**#SA**) and link B.The **#S** report is in the following format:

COMPOSITE STATISTICS

ELAPSED TIME :	00 DAYS	00 HRS	00 MIN.
DATA BLOCKS TRANSMITTED :			0
DATA BLOCKS RETRANSMITS :			0
DATA BLOCKS RECEIVED :			0
RECEIVE BLOCK ERRORS :			0
VOICE/FAX BLOCKS TRANSMITTED :			0
VOICE/FAX BLOCKS RECEIVED :			0
LINK ALARMS :		0	
REMOTE DOWNS :			0
LINK UTILIZATION :			0%
RECEIVE FLOW CONTROL TIME :	00 HRS	00 MIN	00 SEC.
AUTOMATIC REPORTING :	OFF	19200 BAUD	

LED Status #SL This command displays the MultiMux front panel LED Status in the following format:

THIS IS THE CURRENT STATUS OF THE FRONT PANEL LEDS ON MULTIMUX
= ON BLANK = OFF X=UNKNOWN

COMPOSITE LINK A COMPOSITE LINK B
R F R T R F R T

CARRIER RCVR #	RXCMT XXS #	ETRANS MICT	LOCREM DWN	ESTMOD E	CARRIER RCVR #	RXCMT XXS #	ETRANS MICT	LOCREM DWN	ESTMOD E

5.2.5
Voice/Fax Channel Commands

The Voice/Fax Channel commands control the traffic of the voice and fax communication over the composite link network. The Voice/Fax Channel commands are described in detail below:

List The Voice/Fax Channel Parameters List The Voice/Fax Channel Parameters command causes the MultiMux to display the parameters for the Voice/Fax channels on the system's supervisory console as shown in the following example. The Voice/Fax channel parameters display general **VL** parameters for both channels and the local and remote channel interfaces. To display the parameters for the Voice/Fax channels, you would enter **ATVL** and hit your Return key.

LOCAL VOICE/FAX PARAMETERS CHANNEL1 LOCAL VOICE/FAX PARAMTERS CHANNEL 2

PARAMETER	STATUS	PARAMETER	STATUS
DESTINATION CHANNEL	01	DESTINATION CHANNEL	02
DESTINATION NODE	01	DESTINATION NODE	01
LINK A/B/D	A	LINK A/B/D	A
DIGITIZING RATE	16000	DIGITIZING RATE	16000
OUTPUT LEVEL ATTEN.	12	OUTPUT LEVEL ATTEN.	12
INPUT LEVEL GAIN	03	INPUT LEVEL GAIN	03
SILENCE SUPPRESSION	02	SILENCE SUPPRESSION	02
LOCAL INTERFACE TYPE	FXS	LOCAL INTERFACE TYPE	FXS
GROUND/LOOP START (FXS)	LOOP	GROUND/LOOP START (FXS)	LOOP
2 OR 4 WIRE (E&M)	2 WIRE	2 OR 4 WIRE (E&M)	2 WIRE
DIALTONE/WINK (E&M)	N/A	DIALTONE/WINK (E&M)	N/A
WINK TIMER	N/A	WINK TIMER	N/A
REMOTE INTERFACE TYPE	FXS	REMOTE INTERFACE TYPE	FXS
GROUND/LOOP START (FXS)	LOOP	GROUND/LOOP START (FXS)	LOOP
2 OR 4 WIRE (E&M)	2 WIRE	2 OR 4 WIRE (E&M)	2 WIRE
DIALTONE/WINK (E&M)	N/A	DIALTONE/WINK (E&M)	N/A

Reset Voice/Fax Channel The Reset Voice/Fax Channel command sets the operating parameters for the voice/fax channel to the most recently stored values and resets that channel.

V(1/2)Z Voice/Fax Destination Channel The Voice/Fax Destination Channel command selects which voice/fax channel (1 or 2) on the destination MultiMux will receive the voice/fax information. Local voice channel 1 (**V1**) can select destination channel 1 **DC1** or destination channel 2 **DC2** to receive the information. Similarily, **V2** can select **DC1** or **DC2**.

V(1/2)DC Voice/Fax Destination Node The voice/Fax Destination Node command **(V(1/2)DN(0-31))** selects the destination MultiMux (0-31) for which voice/fax data will be sent. The voice/fax channels 1 or 2 can select destination **V(1/2)DN** nodes from 0 to 31. Voice/fax channel 1 can select a destination node of 25 using **V1DN25** command.

Link the Voice/Fax Channel will Communicate Over The Link the voice/Fax Channel will Communicate Over command **(V(1/2)ML(A/B/D))** selects the composite link (A/B/D) in which the voice/fax data will be sent. Local voice/fax channel 1 can send voice/fax data over composite link A by executing **V1MLA** **V(1/2)ML** command. The **V2MLD** command enables voice/fax channel

2 to transfer data using the dynamic link selection which allows the MultiMux to select the least busy link.

Voice/Fax Channel Digitizing Rate **V(1/2)DR** The Voice/Fax Channel Digitizing Rate command selects from two digitized or compressed rates 9600 or 16000 bps. At the 16000 bps rate, the voice transmission will be clearer. The **V1DR9600** places voice/fax channel 1 at a digitized or compressed rate of 9.6K bps. Note, with silence suppression enabled, less than 9600 bps of the link is used. The default digitizing rate is 16000 bps.

Voice/Fax Channel Input Level Gain **V(1/2)IL** The Voice/Fax Channel Input Level Gain command selects the gain of the input voice/fax signal. As the input level gain is increased, the volume level increases. The input level gain ranges from -6 to 18db in increments of 1db with 0 db producing no gain.

COMMAND	LEVEL	COMMAND	LEVEL	
V(1/2)IL0	-6db	V(1/2)IL1	-5db	V(1/2)IL2 -4db
V(1/2)IL3	-3db	V(1/2)IL4	-2db	V(1/2)IL5 -1db
V(1/2)IL6	0db	V(1/2)IL7	1db	
V(1/2)IL8	2db	V(1/2)IL9	3db	V(1/2)IL10 4db
V(1/2)IL11	5db			
V(1/2)IL12	6db	V(1/2)IL13	7db	V(1/2)IL14 8db
V(1/2)IL15	9db	V(1/2)IL16	10db	V(1/2)IL17 11db
V(1/2)IL18	12db	V(1/2)IL19	13db	
V(1/2)IL20	14db	V(1/2)IL21	15db	V(1/2)IL22 16db
V(1/2)IL23	17db			
V(1/2)IL24	18db			

When the input level on the local mux is adjusted, the volume level heard on the remote mux will change accordingly. The input level gain needs to be set on the transmitting mux (talking). This will increase the volume that the person at the receiving mux hears. To increase the input level gain at the receiving mux will have no affect on what this person hears.

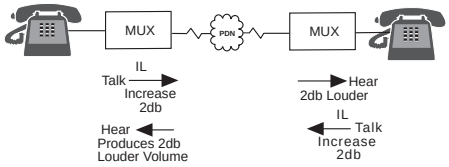

Note

For the best results, increase or decrease both the local output level and remote input level settings by a small amount to change the volume level heard at the local voice/fax channel.

The default settings per configuration are as follows:

	Local		Remote	
Configuration	**IL**	**OL**	**IL**	**OL**
FXS to FXO	6	9	5	2
FXS to FXS	3	12	3	12
E&M to E&M (4-Wire)	5	14	5	14

Voice/Fax Channel Output Level Atten. **V(1/2)OL** The Voice/Fax Channel Output Level Attentuation command selects the output signal level properties of the voice/fax transmission. As the output level attentuation increases, the volume level decreases. The signal level properties are incremented in decible levels of 0.75db. Command **V(1/2)OL0** is no signal level attentuation for the 2-wire and 10db for the 4-wire.

COMMAND	LEVEL		COMMAND	LEVEL		
	2-Wire	**4-Wire**		**2-Wire**	**4-Wire**	
V(1/2)OL0	0db	10db	V(1/2)OL1	-0.75db	9.25db	V(1/2)OL2 -1.5db
8.5db	V(1/2)OL3	-2.25db	7.75db	V(1/2)OL4	-3.0db	7.0db V(1/2)OL5
-3.75db	6.25db		V(1/2)OL6	-4.5db	5.5db	V(1/2)OL7 -5.25db

4.75db V(1/2)OL8 -6.0db 4.0db V(1/2)OL9 -6.75db 3.25db
V(1/2)OL10 -7.5db 2.5db V(1/2)OL11 -8.25db 1.75db
V(1/2)OL12 -9.0db 1.0db V(1/2)OL13 -9.75db 0.25db V(1/2)OL14 -
10.5db -0.5db V(1/2)OL15-11.25db -1.25db V(1/2)OL16 -12.0db -2.0db V(1/
2)OL17 -12.75db -2.75db V(1/2)OL18 -13.5db-3.5db V(1/2)OL19 -14.25db-
4.25db

COMMAND	LEVEL		COMMAND	LEVEL			
	2-Wire	4-Wire		2-Wire	4-Wire		
V(1/2)OL20	-15.0db	-5.0db	V(1/2)OL21	-15.75db	-5.75db	V(1/2)OL22	-16.5db
-6.5db	V(1/2)OL23	-17.25db	-7.25db				
V(1/2)OL24	-18.0db	-8.0db	V(1/2)OL25	-18.75db	-8.75db	V(1/2)OL26	-19.5db
-9.5db	V(1/2)OL27	-20.25db	-10.25db				
V(1/2)OL28	-21.0db	-11.0db	V(1/2)OL29	-21.75db	-11.75db	V(1/2)OL30	-22.5db
-12.5db	V(1/2)OL31	-23.25db	-13.25db				

The output level gain needs to be set at the mux that is receiving (hearing), this will change the volume level that the person at the receiving mux hears. To increase the output level gain at the transmitting mux will have no affect on the loudness heard by the person at the receiving mux.

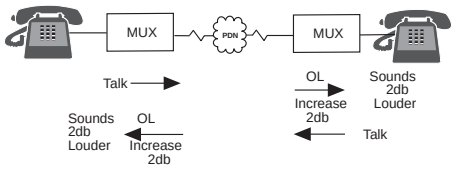

Note
For the best results, increase or decrease both the local output level and remote input level settings by a small amount to change the volume level heard at the local voice/fax channel.

The default settings per configuration are as follows:

	Local		Remote	
Configuration	**IL**	**OL**	**IL**	**OL**
FXS to FXO	6	9	5	2
FXS to FXS	3	12	3	12
E&M to E&M (4-Wire)	5	14	5	14

Voice/Fax Channel Silence Suppression The Voice/Fax Channel Silence Suppression command keeps moments of silence from using up bandwidth on the composite link. Typically, a voice conversation is 50 to 60% silence. Silence **V(1/2)SS** suppression is helpful when using a slow composite link speed such as 19,200 bps. The higher the command level (e.g., **V1SS2**), the greater the silence suppression. The range of the command is from 0 to 2. When silence suppression is set to zero, all sound passes through the link, even silence. Silence suppression is active when there is no activity on the voice/fax channel. Increasing the setting increases the volume necessary for sound to be sent over the link.

Voice/Fax Channel Local Interface The Voice/Fax Channel Local Interface command configures the local voice/fax channel interface. The **V1LIFXO** command sets voice/fax channel 1 on the local MultiMux for an FXO **V(1/2)LI** connection. When the local MultiMux is configured for FXO, the remote site has to be configured for an FXS interface. When the local MultiMux is configured for an E&M interface, the E&M type has to be determined, whether dial or wink is going to be used, and whether the connection is 2-wire or 4-wire. For example, to configure local voice/fax channel 1 for E&M type 1 which is very common in the U.S., wink-start E&M signaling and a 2-wire connection, the command would be **V1LIE&M1W2**. The Local Channel Interface command are as follows:

ATV(1/2)LIFXO	FXO Interface	Connects to station side of PBX.
ATV(1/2)LIFXSG	FXS w/Ground Start Line	Connects a single telephone/fax with a ground start line to the mux.

	ATV(1/2)LIFXSL	FXS w/Loop	Connects a single	
Start Line	telephone/fax with a			loop start line to the mux.
	ATV(1/2)LIE&M(1-5)	E&M Interface	Connects to E&M trunk	**(D/W)(2-4)**
	side of a PBX.			
	(1-5)		Selects E&M type 1-5.	
	(D/W)		Selects E&M dial or wink	
	(2/4)		Selects E&M 2 or 4-wire	

Voice/Fax Channel The Voice/Fax Remote Channel Interface command informs the **Remote Interface** local voice/fax channel of how the remote channel may be configured. A word of **caution** here, this command does not **V(1/2)RI** actually change the remote interface. You may have to contact the remote site for verification of its actual interface. The **V1RIFXS** command says that the remote interface is set for an FXS connection. If erratic voice/fax operation is noticed, the remote interface may be incorrectly set at the local MultiMux. The Remote Channel Interface commands are as follows:

	ATV(1/2)RIFXO	FXO Interface	Station side of PBX.	
	ATV(1/2)RIFXSG	FXS w/Ground	Single telephone/fax	
Start Line	with Ground Start.			
	ATV(1/2)RIFXSL	FXS w/Loop	Single telephone/fax	
Start Line	with Loop Start.			
	ATV(1/2)RIE&M(1-5)	E&M Interface	Connects to E&M trunk	**(D/W)(2-4)**
	side of a PBX.			
	(1-5)		Selects E&M type 1-5.	
	(D/W)		Selects E&M dial or wink	
	(2/4)		Selects E&M 2 or 4-wire	

Voice/Fax Channel Wink Timer

V(1/2)WT

The Wink Timer command is used in the E&M interface to delay the sending of address information from the remote MultiMux. The wink timer range is from 100 to 350 milliseconds. The default delay is 250 msec.

5.2.6 Test Commands

Memory Test

&T1-2

There are two memory tests available on the MultiMux. The first test (**&T1**) will alter the contents of the basic system memory, which is automatically restored when power is turned on to the system or when a reset command is executed. The second memory test (**&T2**) alters the contents of the memory that stores parameters. When this test is executed, a warning is given that stored parameters will be destroyed. If the Memory Test 2 (**&T2**) passes, the factory default parameters will be loaded into your MultiMux.

When executing any of the memory tests, a complete cycle is indicated by a message on the supervisory console and test errors are indicated by appropriate messages.

Test Mode 3 Test Mode 3 tests the memory located on the voice/fax board (if installed) that is common to the voice/fax and system boards.

&T3

Test Mode 4

&T4

Test Mode 4 is the Local Loop test which checks the operation of a local MultiMux. This test mode will cause data entered on channel device keyboards to be echoed back to the device's monitor. When initiating this test, downline loading must be disabled.

Test Mode 5 **&T5** Test Mode 5 is the Remote Loop test which causes any data from the composite link to be echoed through the DSU and back to the link. This command is used so that the local MultiMux can have data entered on its channel devices echoed back to the same originating channel device monitor. When initiating this test, the source and destination nodes on the local MultiMux must have the same values and the downline load feature disabled.

Test Mode 6 Not Used.

Test Mode 7 **&T7** Test Mode 7 is the Switch and LED operational test. By running your MultiMux in this test mode, you can switch the eight DIP-switches and verify that they work by corresponding LEDs being lit.

Test Mode 8 **&T8** Test Mode 8 is the Non-Volatile Memory test. Its function is to check the proper operation of the MultiMux's storage of operational parameters. This test will overwrite the stored parameters.

Test Mode 9 **&T9** Test Mode 9 is the Watch-Dog Timer test. This test checks the MultiMux's Watch-Dog circuitry. The function of the circuitry is to return the mux to normal operating mode if, for some reason, its operation becomes erratic.

Test Mode 10 Not used.

Test Mode 11 **&T11** Test mode 11 is the local channel test which checks the operation of all channels (cabling, connection, etc) by outputting "The Quick Brown Fox Jumped Over..." to all channel devices. You should receive the complete sentence each time an &T11 command is executed.

Test Mode 12 **&T12** Test mode 12 is the voice/fax loopback test (if the voice/fax feature is installed). When this test is initiated, voice/fax channel 1 will communicate with voice/fax channel 2 and vice/versa on the same MultiMux unit. You will need to configure the local and remote interface types (FXS,FXO, E&M) that you wish to test on each voice/fax channel.

Test Mode 13 **&T13** Test Mode 13 is the local loop test that receives data from a synchronous device and loops that data back to the sync device. The MultiMux has to have port B configured as a synchronous data channel in order for this test mode to function. To exit the test mode, you need to reset the MultiMux by entering a **ATZ** command.

5.2.7 Command Modem Commands

The command modem select and remote access commands are described in this section. The command modem accepts commands at speeds up to 2400 bps. Additional command modem AT commands are provided in Appendix D.

Command Modem Select **#MA** The Command Modem Select command **#MA1** sends all subsequent commands generated on your supervisory console to the command modem. The various commands for the command modem are AT command set compatible with those described in Appendix F. The **#MA1** command enables the command modem. The **#MA0** command disables the command modem input and hangs up the phone line.

6.1
Introduction

The following procedures assume that your MultiMuxes (local and remote) have been installed properly (refer to Chapter 4) and the appropriate channel devices have been connected to each channel.

6.2
MultiMux Operating Procedures

The MultiMux operating procedures cover entering parameters for both your local and remote MultiMux units.

Table 6-1. MultiMux Operating Procedures

Step	Procedure
1	Turn power on to your MultiMux and supervisory console, type AT and then hit Return. If you get an OK message back, you are communicating with the command port.
2	Execute the parameter display command to display current channel parameter status for your local MultiMux by entering the following: ATL (hit Return)

The following will be displayed on your supervisory console:

Local Channel Parameters/ Node # 00

CHN	SPD	STP WD	STP BIT	STP PAR	FLOW CTRL	ENQ/ ACK	ECHO	PACE	PASS EIA	PASS XON	DEST CHN	DEST NODE	LINK A/B
01	19200	8	1	NONE	XON/XOFF	OFF	OFF	OFF	OFF	OFF	01	01	A
02	19200	8	1	NONE	XON/XOFF	OFF	OFF	OFF	OFF	OFF	02	01	A
03	19200	8	1	NONE	XON/XOFF	OFF	OFF	OFF	OFF	OFF	03	01	A
04	19200	8	1	NONE	XON/XOFF	OFF	OFF	OFF	OFF	OFF	04	01	A
05	19200	8	1	NONE	XON/XOFF	OFF	OFF	OFF	OFF	OFF	05	01	A
06	19200	8	1	NONE	XON/XOFF	OFF	OFF	OFF	OFF	OFF	06	01	A
07	19200	8	1	NONE	XON/XOFF	OFF	OFF	OFF	OFF	OFF	07	01	A
08	19200	8	1	NONE	XON/XOFF	OFF	OFF	OFF	OFF	OFF	08	01	A
09	19200	8	1	NONE	XON/XOFF	OFF	OFF	OFF	OFF	OFF	09	01	A
10	19200	8	1	NONE	XON/XOFF	OFF	OFF	OFF	OFF	OFF	10	01	A
11	19200	8	1	NONE	XON/XOFF	OFF	OFF	OFF	OFF	OFF	11	01	A
12	19200	8	1	NONE	XON/XOFF	OFF	OFF	OFF	OFF	OFF	12	01	A
13	19200	8	1	NONE	XON/XOFF	OFF	OFF	OFF	OFF	OFF	13	01	A
14	19200	8	1	NONE	XON/XOFF	OFF	OFF	OFF	OFF	OFF	14	01	A
15	19200	8	1	NONE	XON/XOFF	OFF	OFF	OFF	OFF	OFF	15	01	A
16	19200	8	1	NONE	XON/XOFF	OFF	OFF	OFF	OFF	OFF	16	01	A

OK

Table 6-1. MultiMux Operating Procedures (cont.)

Step	Procedure
3	To reconfigure the channel parameters to match your actual channel requirements enter commands as described in Chapter 5 of this manual.
4	If you change operational parameters they are not incorporated into your running system until you execute a Store New Parameters (**&W**) command: AT&W (hit Return) The parameters will be stored in non-volatile memory and become effective immediately. When power is turned off, the parameters will be saved.
5	If you wish to display the composite link status, execute the List Composite Link Configuration command by entering the following: AT$L (hit Return) The following will be displayed on your system monitor if your MultiMux is configured with an internal composite link DSU on links A and B:

Configuration of Port A: Composite Link

DSU TYPE	SPEED	CLLCKING	LOOPBACK
EXTERNAL	128K	INTERNAL	OFF

Configuration of Port B: Composite Link

DSU TYPE	SPEED	CLOCKING	LOOPBACK
EXTERNAL	128K	INTERNAL	OFF

The following will be displayed on your system monitor if your MultiMux is configured with Port B as a synchronous data channel:

Configuration of Port A: Composite Link

DSU TYPE	SPEED	CLOCKING	LOOPBACK
EXTERNAL	56K	INTERNAL	OFF

Configuration of Port B: Sync Data

DSU TYPE	SPEED	CLOCKING	LOOPBACK
ANY SDLC	56K	INTERNAL	OFF

Based on the listed composite link configuration conditions, reconfigure the parameters to the conditions required in your particular installation by entering the appropriate Internal Composite Link Configuration Commands as described in Chapter 5 of this manual. If you wish to save new parameters, you must execute a **AT&W** command.

6If you wish to display the remote parameter status screen for downline loading, execute the Select Downline Load Parameters command by entering the following:
AT&SR (hit Return)

Table 6-1. MultiMux Operating Procedures (cont.)

Step	Procedure

The following will be displayed on your supervisory console:

Down line Load Channel Parameters

CHN	SPD	STP WD	STP BIT	STP PAR	FLOW CTRL	ENQ/ ACK	ECHO	PACE	PASS EIA	PASS XON	DEST CHN	DEST NODE	LINK A/B
01	19200	8	1	NONE	XON/XOFF	OFF	OFF	OFF	OFF	OFF	01	00	A
02	19200	8	1	NONE	XON/XOFF	OFF	OFF	OFF	OFF	OFF	02	00	A
03	19200	8	1	NONE	XON/XOFF	OFF	OFF	OFF	OFF	OFF	03	00	A
04	19200	8	1	NONE	XON/XOFF	OFF	OFF	OFF	OFF	OFF	04	00	A
05	19200	8	1	NONE	XON/XOFF	OFF	OFF	OFF	OFF	OFF	05	00	A
06	19200	8	1	NONE	XON/XOFF	OFF	OFF	OFF	OFF	OFF	06	00	A
07	19200	8	1	NONE	XON/XOFF	OFF	OFF	OFF	OFF	OFF	07	00	A
08	19200	8	1	NONE	XON/XOFF	OFF	OFF	OFF	OFF	OFF	08	00	A
09	19200	8	1	NONE	XON/XOFF	OFF	OFF	OFF	OFF	OFF	09	00	A
10	19200	8	1	NONE	XON/XOFF	OFF	OFF	OFF	OFF	OFF	10	00	A
11	19200	8	1	NONE	XON/XOFF	OFF	OFF	OFF	OFF	OFF	11	00	A
12	19200	8	1	NONE	XON/XOFF	OFF	OFF	OFF	OFF	OFF	12	00	A
13	19200	8	1	NONE	XON/XOFF	OFF	OFF	OFF	OFF	OFF	13	00	A
14	19200	8	1	NONE	XON/XOFF	OFF	OFF	OFF	OFF	OFF	14	00	A
15	19200	8	1	NONE	XON/XOFF	OFF	OFF	OFF	OFF	OFF	15	00	A
16	19200	8	1	NONE	XON/XOFF	OFF	OFF	OFF	OFF	OFF	16	00	A

OK

This display is not a listing of the actual parameters, but shows what can be downline loaded.

7After the remote parameter status screen is displayed, hit Return to display the Remote Source Node Number Group Select screen that permits you to update either 16 channel entries for an MMV1600 series or 32 channel entries for an MMV3200 series.

Source Node For Group A (Channels 1-4)=xxx
Source Node For Group B (Channels 5-8)=xxx
Source Node For Group C(Channels 9-12)=xxx
Source Node For Group D (Channels 13-16)=xxx

Source Node For Group E (Channels 17-20)=xxx
Source Node For Group F (Channels 21-24)=xxx
Source Node For Group G (Channels 25-28)=xxx
Source Node For Group H (Channels 29-32)=xxx

For example, if your MultiMux MMV3200 series is connected to another 32 channel MultiMux with a source node (SN) of 199, set all channels to 199 by entering ATSNGA199<CR>, then ATSNGB199, etc.

Table 6-1. MultiMux Operating Procedures (cont.)

Step	Procedure

8To reconfigure a channel based on your actual channel requirements, enter commands as described in Chapter 5 of this manual. To save new parameters, you must again execute an **AT&W** command.

9If you are downline loading remote parameters, 8-position DIP switch SW1 must be in the UP (open) position; refer to the 8-position DIP Switch in the Configuration Chapter (Chapter 3) of this manual. The other mux in your network must be configured properly and have its 8-position DIP switch SW1 in the DOWN (closed) position. You then can execute a Reset command (**Z**) to send the new parameters to your remote mux.

10To return to local parameter display and control, execute a Select Local Parameter command by entering the following:

AT&SL (hit Return)

11To use the status display and auto reporting feature, execute the Status Reporting command by entering the following:

AT**#**A/BS0 (hit Return)

The following will be displayed on your system monitor:

COMPOSITE STATISTICS

ELAPSED TIME	:	00 DAYS	00 HRS	00 MIN.
DATA BLOCKS TRANSMITTED	:			0
DATA BLOCKS RETRANSMITS	:			0
DATA BLOCKS RECEIVED	:			0
RECEIVE BLOCK ERRORS	:			0
VOICE/FAX BLOCKS TRANSMITTED	:			0
VOICE/FAX BLOCKS RECEIVED	:			0
LINK ALARMS	:			0
REMOTE DOWNS	:			0
LINK UTILIZATION	:			0%
RECEIVE FLOW CONTROL TIME	:	00 HRS	00 MIN	00 SEC.
AUTOMATIC REPORTING	: OFF	19200	BAUD	

To select the bps rate and time interval at which the above status screen will appear, execute a **#RBxx** and **#RTxx** commands as described in Chapter 5 of this manual.

6.3
Voice/Fax Operating Procedures

The Voice/Fax Operating Procedures begin with displaying the Voice/Fax Channel parameters and then executing the commands to change the default parameters to fit your specific voice or fax needs. The Voice/Fax Channel parameters are displayed for both channels and contain general parameters for each channel such as destination channel number through silence suppression. The local and remote interface types define the specific type of interface and the conditions that govern that interface. Not all the parameters for a particular interface apply, such as 2 or 4-wire, and dialtone or wink do not apply for an FXO interface. To change a default Voice/Fax Channel parameter, refer to the Voice/Fax Channel Commands in Chapter 5.

Table 6-2. Voice/Fax Operating Procedures

Step **Procedure**

1If you wish to display the Voice/Fax Channel Parameters, execute the List The Voice/Fax Channel Parameters command by entering the following:

ATVL (hit Return)

The following will be displayed on your system monitor:

LOCAL VOICE/FAX PARAMETERS CHANNEL1 LOCAL VOICE/FAX PARAMTERS CHANNEL 2

PARAMETER	STATUS	PARAMETER	STATUS
DESTINATION CHANNEL:	01	DESTINATION CHANNEL:	02
DESTINATION NODE:	01	DESTINATION NODE:	01
LINK A/B/D:	A	LINK A/B/D:	A
DIGITIZING RATE:	16000	DIGITIZING RATE:	16000
OUTPUT LEVEL ATTEN.:	12	OUTPUT LEVEL ATTEN.:	12
INPUT LEVEL GAIN:	03	INPUT LEVEL GAIN:	03
SILENCE SUPPRESSION:	00	SILENCE SUPPRESSION:	00
LOCAL INTERFACE TYPE:	FXS	LOCAL INTERFACE TYPE:	FXS
GROUND/LOOP START (FXS):	LOOP	GROUND/LOOP START (FXS):	LOOP
2 OR 4 WIRE (E&M):	2 WIRE	2 OR 4 WIRE (E&M):	2 WIRE

DIALTONE/WINK (E&M):	N/A	DIALTONE/WINK (E&M):	N/A
WINK TIMER	N/A	WINK TIMER	N/A
REMOTE INTERFACE TYPE:	FXS	REMOTE INTERFACE TYPE:	FXS
GROUND/LOOP START (FXS):	LOOP	GROUND/LOOP START (FXS):	LOOP
2 OR 4 WIRE (E&M):	2 WIRE	2 OR 4 WIRE (E&M):	2 WIRE
DIALTONE/WINK (E&M):	N/A	DIALTONE/WINK (E&M):	N/A

Table 6-2. Voice/Fax Operating Procedures (Cont.)

Step	Procedure

2To reconfigure the Voice/Fax channel parameters to match your actual requirements enter commands as described in Chapter 5 of this manual.

Note

A word of **caution** here, if you change your remote interface parameters and your operation seems to become erratic, recheck your remote parameters and verify them with your remote site.

3If you change parameters they are not incorporated into your running system until you execute a Store New Parameters (**&W**) command:

AT&W (hit Return)

The parameters will be stored in non-volatile memory and become effective immediately. When power is turned off, the parameters will be saved.

6.4
Command Modem Operating Procedures

A wide variety of autodial operations and modem options can be controlled when the command modem is in the command mode. Command modem access commands are described in Chapter 5. Appendix D describes the general AT commands in detail.

Table 6-3. Command Modem Operating Procedures

Step	Procedure

1Set your supervisory console to 2400 bps or less to communicate with the command modem. Execute the Command Modem Select command by entering the following:

AT#MA1 (hit Return)

The following will be displayed on your supervisory console when connected and in command mode:

COMMAND MODEM ACCESS ON

You may now enter the commands for the command modem as described in Appendix F.

2You can have the "Result Codes" displayed in a “verbose” format (complete English words), or in a “terse” format (single digit numbers). The factory default format is verbose. To change to terse format, enter the Result Code Digit command as follows:

ATV0 (hit Return)

You can also choose to completely eliminate the display of all Result Codes by executing a Quiet (**Q**) command.

Before dialing your remote MultiMux, make sure that it is ready to accept calls through its command modem by having its 8-position DIP switch SW4 set to the OPEN (UP) position.

3Dial the phone number of your remote MultiMux. To dial a phone number, use the Dial (**D**) command. You can use Tone (**T**) dialing or Pulse (**P**) dialing and insert Automatic Pauses in Dialing (,) for functions such as dialing through a PBX switchboard. Refer to Appendix D for detailed descriptions of dialing commands.

For example, enter the following to dial a phone number (555-1212) through a switchboard.

ATD9,5551212 (hit Return)

When a carrier signal is detected, the Connect (1) Result Code is displayed.

If no carrier is detected, the No Carrier (3) Result Code is displayed after about 30 seconds.

Table 6-2. Command Modem Operating Procedures (Cont.)

Step **Procedure**

4 You are now communicating with your remote MultiMux. Any commands you now execute will be done by the remote unit. For instance, to request status of the remote system execute the List Channel Parameters Command by entering the following:

ATL (hit Return)

The following, which will be an actual listing of the remote unit's channel parameters, will appear on your supervisory console:

Local Channel Parameters/ Node # 01

CHN	SPD	STP WD	STP BIT	STP PAR	FLOW CTRL	ENQ/ ACK	ECHO	PACE	PASS EIA	PASS XON	DEST CHN	DEST NODE	LINK A/B
01	19200	8	1	NONE	XON/XOFF	OFF	OFF	OFF	OFF	OFF	01	02	A
02	19200	8	1	NONE	XON/XOFF	OFF	OFF	OFF	OFF	OFF	02	02	A
03	19200	8	1	NONE	XON/XOFF	OFF	OFF	OFF	OFF	OFF	03	02	A
04	19200	8	1	NONE	XON/XOFF	OFF	OFF	OFF	OFF	OFF	04	02	A
05	19200	8	1	NONE	XON/XOFF	OFF	OFF	OFF	OFF	OFF	05	02	A
06	19200	8	1	NONE	XON/XOFF	OFF	OFF	OFF	OFF	OFF	06	02	A
07	19200	8	1	NONE	XON/XOFF	OFF	OFF	OFF	OFF	OFF	07	02	A
08	19200	8	1	NONE	XON/XOFF	OFF	OFF	OFF	OFF	OFF	08	02	A

OK

To end your call to the remote site you can either terminate the whole command modem operation and put your supervisory console back into communications with your local MultiMux, or you can end the current call and remain connected to your command modem for additional remote communications.

To end the current call and place supervisory console control back to the local MultiMux, enter the following command:

AT#MA0 (hit Return)

To end the call and remain connected to your command modem, enter the following command:

+++ (hit Return)

Wait for the OK (0) Result code to be displayed on your supervisory console, then enter the following:

ATZ (hit Return)

7.1
Introduction

The MultiMux is designed to make it easy to operate and maintain. The procedures in this chapter will help isolate any problem you have to a specific component of your network, at which point you will be instructed to call the appropriate personnel or execute commands to adjust operating conditions.

There are no specific repair procedures besides command execution and switch settings that you are expected to perform in MultiMux maintenance.

An important part of the MultiMux design is its remote diagnostic capabilities. Our Tech Support department personnel can dial-up your MultiMux through the command modem and execute special diagnostics that will help find problems fast. When you're stuck on a problem, do not hesitate to call us for help. Our staff may have encountered your problem before and can help you quickly. Our phone numbers are listed in Chapter 8 of this manual.

7.2
Importance of Composite Statistics

The Composite Statistics Command **AT#SA/B** provides additional information concerning the operation of your composite link that can aid you in testing for problems. The composite report generated by this command can be very valuable when used in conjunction with Analog Loopback testing. For example, if your REMOTE DWN indicator is on, you could run an Analog Loopback test to make sure the failure is not in the MultiMux. If the test runs correctly, you then can check the composite statistics for additional information.

The data in the composite statatistics report will tell you more about line failure conditions. The following items are on your composite status report:

		COMPOSITE STATISTICS		
ELAPSED TIME	:	00 DAYS	00HRS	00 MIN.
DATA BLOCKS TRANSMITTED	:			0
DATA BLOCKS RETRANSMITS	:			0
DATA BLOCKS RECEIVED	:			0
RECEIVE BLOCK ERRORS	:			0
VOICE/FAX BLOCKS TRANSMITTED	:			0
VOICE/FAX BLOCKS RECEIVED	:			0
LINK ALARMS	:			0
REMOTE DOWNS	:			0
LINK UTILIZATION	:			0%
RECEIVE FLOW CONTROL TIME	:	00 HRS	00 MIN	00 SEC.
AUTOMATIC REPORTING	:	OFF 9600 BAUD		

Comparing the number of blocks transmitted with the number of retransmits needed to get the data through can indicate a line problem. Comparing the blocks received and receive block errors indicates the same problem from the other end of the link. The comparative numbers that you might encounter could be 10,000 blocks transmitted (or received) with 500 or 1000 retransmits (or receive block errors).
Link Alarms simply tell you that there are some sort of problems on the link. You will find that the Link Alarm numbers will correspond to the Retransmit and Receive Block numbers. Specifically, a Link Alarm means that it has been 10 seconds since the MultiMux has received an acknowledgment. Normally, three acknowledgments will be received during a 10 second period.

The Remote Down entry means that a MultiMux has sent data 30 times and could not get it through (the link has been broken).

The other entries in the composite status report do not apply to link problems.

7.3
Test Cables

If you are using the MultiMux internal DSU, there are two test cables provided which can be used to help checkout your system (refer to Figure 7-1). The MultiMux Test cable is a special back-to-back composite link test cable that can connect your two MultiMuxes locally before installing them using a phone line. This cable will allow you to verify operation of all aspects of the MultiMux prior to actual installation. The second test cable is the Composite Link Loopback cable. Its function is to loopback the DSU signals to itself (loopback) so that you can check the function of the MultiMux while installed without having to use the composite link phone line. If you are using an external synchronous modem for the link communications, refer to its documentation for testing procedures.

If you have any problems in performing these procedures, contact Multi-Tech's Technical Support department for assistance, refer to Chapter 8.

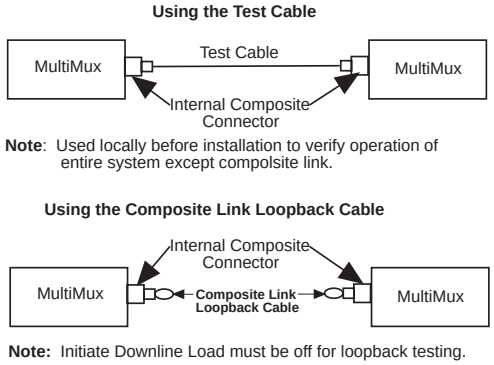

Figure 7-1. Off Line Test Modes

7.4
Troubleshooting Guide

The following guides are set up as a series of possible conditions, causes and suggested fixes or steps in finding the failing unit. Because of the different manufacturer's equipment involved in typical multiplexer networks, you may encounter "finger pointing" as to who is at fault. Who is at fault is not as important as getting you back on line as soon as possible. The intent of the following guides are to indicate the most probable cause of specific error conditions, but, since similar conditions may account for a number of different failures, the following guides are just that: a guide to troubleshooting.

The parts of your mux network are:

Data Channel
- Channel devices (printers, terminals, pc's, etc.)
- Channel Communications (RS232 cabling, asynchronous modems, etc.)

Voice/Fax Channel
- Telephones and fax machines
- Station side of PBX
- E&M trunk

Control units

Composite Link
- Digital composite link communications line with internal or external DSU
- External Synchronous link modems
- Composite link communications line (4-wire non-loaded metallic wire)

Once you have found the probable cause of your problem, refer to the specific manual chapter for additional help, or contact Multi-Tech Technical Support (refer to Chapter 8).

Table 7-1. Data Troubleshooting Guide

Condition	Possible Cause	Corrective Action
Supervisory Console	1. Communications software	1. Install communications software on

not communicating with mux command	not installed on Supervisory Console.	supervisory console, refer to comm software user's manual forinstallation.	**port**
	2. Bad cable or cable connection	1. Check RS232 cable connections between supervisory console and COMMAND PORT on MultiMux for loose connection or bent pins, refer to Supervisory Console Installation procedures in Chapter 4	
		2. Check RS232 cable connections between supervisory console and COMMAND PORT on MultiMux for correct cable wiring, refer to Cable Diagrams in Appendix C.	
Supervisory Console not communicating	1. Incorrect command modem baud rate	1. Verify command modem baud rate is set to 2400 bps, refer to Comm Software User's Manual.	**with command mode**
		2. Call Tech Support for assistance, refer to Chapter 8	
Garbage on Supervisory Console Screen	1. Incorrect session parameters	1. Verify session parameters (data bits of 8, parity none, 1 stop bit), refer to comm software user's manual for parameter settings.	
		2. Call Tech Support for assistance, refer to Chapter 8	
Composite Link down with CTS, XMT, and RD LEDs ON	1. Composite Link cabling	1. If internal DSU is installed, check Composite Link cabling for loose connection.	
		2. If external DSU or modem is installed, check RS232C/V.35 cable between devices for loose connection or bent pin.	
	2. Not receiving data from remote mux	1. Verify that both muxes are powered ON.	
		2. Verify that both muxes are connected to communications line.	

Table 7-1. Data Troubleshooting Guide(Continued)

Condition	Possible Cause	Corrective Action
Composite link down with CTS, XMT and RD LEDs ON (Continued)	2. Not receiving data from remote mux (Continued)	3. If external modem are used, verify that they are powered ON and connected to the communication line and Mux composite link.
		4. Call Tech Support for assistance, refer to Chapter 8.
	3. Faulty communication line	1. Call phone company and verify communication line.
		2. Call Tech Support for assistance, refer to Chapter 8.
Composite Link down with CD, CTS, XMT and RCV LEDs ON and RD LED ON	1. Both Muxes set up for down line loading	1. Remove front cover of both muxes and verify if DIP-Switch 1 is in the UP (ON) position.
		2. Place DIP-Switch 1 on one of the muxes in the DOWN (OFF) position.
		3. Call Tech Support for assistance, refer to Chapter 8.
	2. Internal DSU speeds on local and remote muxes do not match.	1. Verify internal DSU speeds with **$L** command, refer to Chapter 5.
Composite link down with CD, CTS and RD LEDs ON	1. External modem settings on remote mux	1. Verify that external modem is set for sync, full duplex and internal clocking.

RD LEDs ON		2. Connect composite link cable between mux and modem.
Composite link and all channels down with RD and all channel RCV LEDs ON parameters will be destroyed.	1. Mux memory failure	1. Enter **ATL** and record all channel parameters before running memory test. Perform memory test by entering &T2 command. All stored 2. Reconfigure all channel parameters. 3. Call Tech Support for assistance, refer to Chapter 8.
Flashing RXT LED	1. High error rate on communication line	1. View composite link statistics using **#S** command, refer to Chapter 5.

Table 7-1. Data Troubleshooting Guide(Continued)

Condition	Possible Cause	Corrective Action
Flashing RXT LED	1. High error rate on communication line	2. Perform local and remote loopback test, refer to the Local and **(Continued)** Communications Line Testing in this Chapter. 3. Call phone company and verify communication line. 4. Call Tech Support for assistance, refer to Chapter 8.
All channel devices not communicating with mux, composite link up with CO, CTS, XMT and RCV LEDs ON and RD OFF	1. Incorrect channel parameter settings	1. Verify channel parameter settings for all channels, refer to Chapter 5 for the C0 command. 2. Change channel parameters to match channel devices. Refer to Chapter 5 for Channel Paramater Commands. 3. Perform channel device testing, refer to Channel Device Testing in this Chapter. 4. Call Tech Support for assistance, refer to Chapter 8.
	2.Channel devices incorrectly cabled	1. Refer to cabling diagrams of both mux and channel devices. 2. Call Tech Support for assistance, refer to Chapter 8.
Some channel devices not communicating with MultiMux and composite link up	1. Incorrect channel parameter settings for those channel devices	1. Verify channel parameter settings for for those channel devices, refer to **Lx** command in Chapter 5 to display channel parameters. 2. Perform channel device testing, refer to Channel Device Testing in this Chapter. 3. Call Tech Support for assistance, refer to Chapter 8.

Table 7-1. Data Troubleshooting Guide(Continued)

Condition	Possible Cause	Corrective Action
Some channel devices not communicating with MultiMux and composite link up	2. Incorrect cabling for those channel devices	1. Refer to cabling diagrams of both mux and channel devices. 2. Call Tech Support for assistance, refer to Chapter 8.
Channel device losing data	1. Flow control not properly set.	1. Verify flow control operations for the selected channel device, refer to **F0-F2** and **F5-F6** commands in Chapter 5.

Table 7-2. Voice/Fax Troubleshooting Guide

Condition	Possible Cause	Corrective Action
Volume levels not sufficient on local voice/fax channel on remote voice/fax channel.	1. Input level gain setting too low	1. Increase input level gain setting on a couple db and recheck voice quality, refer to the **V(1/2)IL** command in Chapter 5.
	2. Output level attentuation setting too high on local voice/fax channel a couple db and recheck voice quality, refer to **V(1/2)OL** command in Chapter 5.	2. Decrease output level attenuation setting on local voice/fax channel.
Local telephone goes off-hook and remote telephone does not ring. FXS to FXS configuration problem.	1. Devices not connected to correct voice/fax channel.	1. Verify that the devices are attached to the correct voice/fax channel RJ-11 connector.
	2. Voice/fax channel configuration is configured correctly (FXS, FXO, or E&M), destination node and composite link.	1. Verify that each voice/fax channel and
		2. Observe that the **XSG** LED on the local voice/fax channel lights when the telephone goes off-hook and that the **RSG** LED on the remote FXS configured voice/fax channel flashes with each ring.
Data throughput slows excessively when one or both voice/fax channels are active.	1. Too much bandwidth being used up for voice/fax.	1. Decrease voice/fax channel digitizing rate to 9600 bps, refer to **V(1/2)DR** command in Chapter 5.
		2. Enable, or if active, increase silence suppression on one or both voice/fax channels, refer to **V(1/2)SS** command in Chapter 5.
FXS to FXO configuration - Local telephone does not ring	1. Device not connected to correct voice/fax channel.	1. Verify that the device is attached to the correct voice/fax channel RJ-11 connector.
	2. Voice/fax channel configuration problem.	1. Verify that the voice/fax channels are configured correctly (destination node and channel and composite link).
		2. Verify that local voice/fax interface type is configured for FXS and remote interface type is set for FXO operation, refer to the **VL** command in Chapter 5.

Table 7-2. Voice/Fax Troubleshooting Guide (Continued)

Condition	Possible Cause	Corrective Action
FXS to FXO configuration - Local telephone does not ring (Continued)		3. Change the local or remote configuration as needed using the **V(1/2)LI** or **V(1/2)RI** command, refer to Chapter 5.
Parts of words not being heard	1. Part of analog signal being clipped off.	1. Lower the input level gain and the output level attentuation a couple of db using the **V(1/2)IL** and **V(1/2)OL** commands. Refer to these commands in Chapter 5.
Voice conversation or fax traffic become erratic after changing the remote interface type	1. Remote connection is different than remote interface type.	1. Verify the remote interface type at the site that was just changed using the **VL** command. Refer to Chapter 5.
		2. Contact the remote site to verify its local interface type and change accordingly using the **V(1/2)RI** command. Refer to Chapter 5.
No communication on either voice/fax channel	1. Composite link down.	1. Call phone company and verify communication line.
	2. Phone cords for the voice and/or fax machine are connected to the correct channel	1. Verify that the phone cords for the voice and/or fax machine are connected to the wrong channel or interface. either and/or

interface connector type.

	3. Voice/fax ribbon cable not connected.	1. Reconnect the voice/fax ribbon cable between the voicefax and aggregate board. Refer to the installation procedures in Chapter 4.
		2. Call Tech Support for assistance, refer to Chapter 8.
	4. MV2 Board failure (test 12), refer to voice/fax channel	1. Perform the voice/fax loopback test testing procedures in this chapter.
		2. Call Tech Support for assistance, refer to Chapter 8.
A voice/fax channel cannot communicate with the remote site	1. Voice/fax channel configuration problem.	1. Verify that the voice/fax channel is configured for the correct node and channel destinaton and composite link. Use the **VL** command to view the voice/fax channel parameters, refer to Chapter 5.

Table 7-2. Voice/Fax Troubleshooting Guide (Continued)

Condition	Possible Cause	Corrective Action
A voice/fax channel cannot communicate with the remote site (Continued)	2. Wrong type of telephone cord. connected to the voice/fax channel is the FXO and/or FXS E&M 1-5 connection.	1. Ensure that the telephone cord an RJ11 for connector(s) or E&M cable for the
No voice/fax communication E&M to E&M	1. Frame ground not connected to PBX	1. Attach PBX ground to MultiMux frame ground screw.
	2. Voice/fax configuration configured properly, (E&M, wink or	1. Verify that voice/fax channel is problem. dial tone, 2 or 4 wire, E&M type).
	3. Incorrect E&M cabling. PBX. See Appendix D as well as	1. Verify connection of E&M cable to PBX documentation.
	asserts the M lead and that RSG	2. Verify that XSG LED lights when PBX LED lights when MultiMux asserts the E lead.
Voice sounds broken or grabled at times	1. Excessive errors on composite link. errors.	1. Examine composite statistics for up
	tests to determine failing unit or bad	2. Perform local and remote loop back communication line.
	communication line.	3. Call phone company and
		4. Call Tech Support for assistance, refer to Chapter 8.

7.5
Channel Device Testing

The first step in system testing is to check the operation of the multiplexer network section from each channel device to the MultiMux and back again to the channel device. These procedures will let you see if data from the channel device is passing through the MultiMux properly, by echoing channel keystrokes through the MultiMux and then displaying them as correct characters on the channel device's monitor.

Table 7-3. Channel Device Testing Procedure

Step **Procedure**

1 Place the local MultiMux unit in Test Mode 4 (i.e., executing the Local Loop test) by entering the following command. If using your external link device, this test does not apply.

AT&T4 (hit Return)

Note: The MultiMux must have downline loading turned off when doing channel device testing.

The supervisory console will display the following message:

LOCAL LOOP - TEST **#4**

2 Enter data on the keyboard of each channel device and, if the local portion of your network is operating correctly, the data will be correctly displayed on each channel device monitor.

If the channel device is equipped with a local echo feature that is active,or if Echoplex is turned on for that channel, double characters will be displayed indicating that the MultiMux is correctly echoing data.

3 When you have verified that the channel devices are operating correctly, enter the following to end the test:

ATZ(hit Return)
or
AT&TO (hit Return)

7.6
DSU and Communications Line Testing

After determining that the channel-device-to-MultiMux portion of the multiplexer network is operating properly, the next steps are to check the operation of the local DSU, the communications line and the remote DSU. By performing the procedures in Table 7-4, the MultiMux can send data (keystrokes) from the channel device and have them echoed through the composite link, remote DSU and back to the channel device's monitor.

Table 7-4. DSU and Communications Line Testing Procedure

Step	Procedure
1	Set the source and destination nodes on the local MultiMux to the same node number.
2	Place the remote MultiMux unit in Test Mode 5 (Digital Loopback test) by entering the following command. AT&5 (hit Return) The supervisory console will display the following message: REMOTE DIGITAL LOOP - TEST #5
3	Enter data on the keyboard of each channel device on the local MultiMux and, if the network is operating correctly, the data will be correctly displayed on the local channel device monitor. If the channel device is equipped with an active local echo feature, double characters will be displayed.
4	When you have verified that the communications link is operating correctly, enter the following to end the test: ATZ (hit Return) or AT&T0 (hit Return)

7.7
MultiMux Functional Testing Procedures

There are tests available on the MultiMux which check various functions within the MultiMux logic. These tests will assist you in trouble shooting problems which are not related to the composite communications channel or local channel devices. The two tests described below will check the non-volatile memory used for parameter storage and internal circuitry, called the Watch-Dog circuitry, which is responsible for keeping the MultiMux functioning normally.

Table 7-5. MultiMux Functional Testing Procedures

Step Procedure

Note: Executing the Battery/Memory test procedures will result in the destruction of stored parameters.

1 Before checking the battery-backed memory feature, enter an ATL command and record all channel parameters.

2 Place the MultiMux in Test Mode 8 (i.e., executing the non-volatile RAM test) by entering the following command:

AT&T8 (hit Return)
(let the test complete its cycle)

The supervisory console will display the following message:

Memory test - This test will destroy all stored configurations.
Do you wish to continue? (Y/N)

3 Press the Y key (the message “writing” will appear while the test is running) and the following message will be displayed on the supervisory console:

Turn power off for 10 seconds and then back on.
Then enter AT to end test.

4 As the message indicates, turn power off for ten seconds, then back on and enter AT and hit Return. Depending on the condition of the battery, one of the following messages will appear on your supervisory console:

Non-Volatile Memory Test Passed
or
Non-Volatile Memory Test Failed

5 To check the Watch-Dog circuitry, place the local MultiMux unit in Test Mode 9 (i.e., executing the Watch-Dog Timer Test) by entering the following command:

AT&T9 (hit Return)

The supervisory console will display the following message:

Watch-Dog Timer Test #9 - wait for test indicator to turn off
and when the test indicator comes back on,
enter “AT” to end test.

6 As the message indicates, after the test indicator comes back on enter the following:

AT (hit Return)

If the test passes, the following message is displayed:

WATCH DOG TEST PASSED

7.8
Voice/Fax Channel Testing

The voice/fax loopback test is confined to the MultiMux that the test is being run on. the loopback test communicates between the two channels on the voice/fax board without going outside the MultiMux. An important factor to consider before running this test is to ensure that the local and remote interfaces for both channels are set up correctly. This test could isolate a voice/fax channel of a MultiMux as being defective.

Table 7-6. Voice/Fax Channel Testing Procedure

Step Procedure

1 Before running the Voice/fax Loopback test, reconfigure the local interface type on voice/fax channel 1 to be the same as the remote interface type on channel 2. Do the same thing for the local and remote interfaces on channel 2. When this test is initiated, voice/fax channel 1 communicates with voice/fax channel 2 and vice/versa on the same MultiMux unit.

2 Place the local MultiMux unit in Test Mode 12 (i.e., executing the voice/fax Loopback test) by entering the following command.

AT&T12 (hit Return)

The supervisory console will display the following message:

VOICE/FAX LOOPBACK - TEST #12

3 Talk over one of the voice/fax channels and listen over the other channel. The voice quality should be the same as if your were talking over the composite link. The voice/fax loopback test only ensure that both channels are communicating.

4 When you have verified that the voice/fax channels are operating correctly, enter the following to end the test:

ATZ (hit Return)
or
AT&T0 (hit Return)

7.9
Sync Data Channel Testing

The Sync Data Channel Loopback test is used when the MultiMux has configured Port B for the sync data mode. This test simulates a modem or DSU in sync loopback mode. To use this test, configure the synchronous device for loopback test in which port B loops the data back to the synchronous device.

Table 7-7. Sync Data Channel Testing Procedure

Step Procedure

1 Before the Sync Data Channel Loopback test is run, port B of the MultiMux has to be set for the sync data mode using the **$MUXBSYNC** command.

2 Place the local MultiMux unit in Test Mode 13 (i.e., executing the Sync Data Channel Loopback test) by entering the following command.

AT&T13 (hit Return)

The supervisory console will display the following message:

AT THIS POINT IN TIME, ANY SYNC DATA
RX'D BY THE MUX IS LOOPED BACK OUT
AND TX'D BY THE MUX.

4 When you have verified that the Sync Data Channel is operating correctly, enter the following to end the test:

ATZ (hit Return)
or
AT&T0 (hit Return)

Chapter 8 - Service, Warranty and Tech Support

Warranty

Multi-Tech Systems, Inc., (hereafter “MTS”) warrants that its products will be free from defects in material or workmanship for a period of two, five, or ten years (depending on model) from date of purchase, or if proof of purchase is not provided, two, five, or ten years (depending on model) from date of shipment.

MTS MAKES NO OTHER WARRANTY, EXPRESS OR IMPLIED, AND ALL IMPLIED WARRANTIES OF MERCHANTABILITY AND FITNESS FOR A PARTICULAR PURPOSE ARE HEREBY DISCLAIMED.

This warranty does not apply to any products which have been damaged by lightning storms, water, or power surges or which have been neglected, altered, abused, used for a purpose other than the one for which they were manufactured, repaired by Customer or any party without MTS’s written authorization, or used in any manner inconsistent with MTS’s instructions.

MTS’s entire obligation under this warranty shall be limited (at MTS’s option) to repair or replacement of any products which prove to be defective within the warranty period or, at MTS’s option, issuance of a refund of the purchase price. Defective products must be returned by Customer to MTS’s factory – transportation prepaid.

MTS WILL NOT BE LIABLE FOR CONSEQUENTIAL DAMAGES, AND UNDER NO CIRCUMSTANCES WILL ITS LIABILITY EXCEED THE PRICE FOR DEFECTIVE PRODUCTS.

Repair Procedures for U.S. and Canadian Customers

In the event that service is required, products may be shipped, freight prepaid, to our Mounds View, Minnesota factory:

Multi-Tech Systems, Inc.

2205 Woodale Drive

Mounds View, MN 55112

Attn: Repairs, Serial # _____

A Returned Materials Authorization (RMA) is not required. Return shipping charges (surface) will be paid by MTS.

Please include, inside the shipping box, a description of the problem, a return shipping address (must have street address, not P.O. Box), your telephone number, and if the product is out of warranty, a check or purchase order for repair charges.

For out of warranty repair charges, go to www.multitech.com/documents/warranties

Extended two-year overnight replacement service agreements are available for selected products. Please call MTS at (888) 288-5470, extension 5308 or visit our web site at

http://www.multitech.com/programs/orc/ for details on rates and coverage's.

Please direct your questions regarding technical matters, product configuration, verification that the product is defective, etc., to our Technical Support department at (800) 972-2439 or email tsupport@multitech.com. Please direct your questions regarding repair expediting, receiving, shipping, billing, etc., to our Repair Accounting department at (800) 328-9717 or (763) 717-5631, or email mtsrepair@multitech.com.

Repairs for damages caused by lightning storms, water, power surges, incorrect installation, physical abuse, or user-caused damages are billed on a time-plus-materials basis.

Repair Procedures for International Customers (Outside U.S.A. and Canada)

Your original point of purchase Reseller may offer the quickest and most economical repair option for your Multi-Tech product. You may also contact any Multi-Tech sales office for information about the nearest distributor or other repair service for your Multi-Tech product.

http://www.multitech.com/COMPANY/offices/DEFAULT.ASP

In the event that factory service is required, products may be shipped, freight prepaid to our Mounds View, Minnesota factory. Recommended international shipment methods are via Federal Express, UPS or DHL courier services, or by airmail parcel post; shipments made by any other method will be refused. A Returned Materials Authorization (RMA) is required for products shipped from outside the U.S.A. and Canada. Please contact us for return authorization and shipping instructions on any International shipments to the U.S.A. Please include, inside the shipping box, a description of the problem, a return shipping address (must have street address, not P.O. Box), your telephone number, and if the product is out of warranty, a check drawn on a U.S. bank or your company's purchase order for repair charges. Repaired units shall be shipped freight collect, unless other arrangements are made in advance.

Please direct your questions regarding technical matters, product configuration, verification that the product is defective, etc., to our Technical Support department nearest you or email tsupport@multitech.com. When calling the U.S., please direct your questions regarding repair expediting, receiving, shipping, billing, etc., to our Repair Accounting department at

+(763) 717-5631 in the U.S.A., or email mtsrepair@multitech.com.

Repairs for damages caused by lightning storms, water, power surges, incorrect installation, physical abuse, or user-caused damages are billed on a time-plus-materials basis.

Repair Procedures for International Distributors

Procedures for International Distributors of Multi-Tech products are on the distributor web site.

http://www.multitech.com/PARTNERS/login/

Copyright © Multi-Tech Systems, Inc. 2001
10-Sep-01

Appendix A
ASCII Character Code/Hex/Decimal Conversion Chart

CTRL	CODE	HEX	DEC	CODE	HEX	DEC	CODE	HEX	DEC	CODE	HEX	DEC
@	NUL	00	0	SP	20	32	@	40	64		60	96
A	SOH	01	1	!	21	33	A	41	65	a	61	97
B	STX	02	2	“	22	34	B	42	66	b	62	98
C	ETX	03	3	#	23	35	C	43	67	c	63	99
D	EOT	04	4	$	24	36	D	44	68	d	64	100
E	ENQ	05	5	%	25	37	E	45	69	e	65	101
F	ACK	06	6	&	26	38	F	46	70	f	66	102
G	BEL	07	7	‘	27	39	G	47	71	g	67	103
H	BS	08	8	(	28	40	H	48	72	h	68	104
I	HT	09	9	)	29	41	I	49	73	i	69	105
J	LF	0A	10	*	2A	42	J	4A	74	j	6A	106
K	VT	0B	11	=	2B	43	K	4B	75	k	6B	107
L	FF	0C	12	,	2C	44	L	4C	76	l	6C	108
M	CR	0D	13	-	2D	45	M	4D	77	m	6D	109
N	SO	0E	14	.	2E	46	N	4E	78	n	6E	110
O	SI	0F	15	/	2F	47	O	4F	79	o	6F	111
P	DLE	10	16	0	30	48	P	50	80	p	70	112
Q	DC1	11	17	1	31	49	Q	51	81	q	71	113
R	DC2	12	18	2	32	50	R	52	82	r	72	114
S	DC3	13	19	3	33	51	S	53	83	s	73	115
T	DC4	14	20	4	34	52	T	54	84	t	74	116
U	NAK	15	21	5	35	53	U	55	85	u	75	117
V	SYN	16	22	6	36	54	V	56	86	v	76	118
W	ETB	17	23	7	37	55	W	57	87	w	77	119
X	CAN	18	24	8	38	56	X	58	88	x	78	120
Y	EM	19	25	9	39	57	Y	59	89	y	79	121
Z	SUB	1A	26	:	3A	58	Z	5A	90	z	7A	122
[	ESC	1B	27	;	3B	59	[	5B	91	{	7B	123
\	FS	1C	28	<	3C	60	\	5C	92	|	7C	124
]	GS	1D	29	=	3D	61	]	5D	93	}	7D	125
	RS	1E	30	>	3E	62	^	5E	94	–	7E	126
—	US	1F	31	?	3F	63	_	5F	95	DEL	7F	127

NUL	Null, or all zeros	DC1	Device Control 1	SI	Shift In
SOH	Start of Header	DC2	Device Control 2	SO	Shift Out
STX	Start of Text	DC3	Device Control 3	SYN	Sync.
ETX	End of Text	DC4	Device Control 4	LF	Line Feed
EOT	End of Transmission	CAN	Cancel	FF	Form Feed
ACK	Acknowledge	EM	End of Medium	ENQ	Enquiry
BEL	Bell or Alarm	SUB	Substitute	ESC	Escape
BS	Backspace	FS	File Separator	DLE	Data Link Escape
HT	Horizontal Tab	GS	Group Separator	NAK	Negative Acknowledge
VT	Vertical Tab	RS	Record Separator	CR	Carriage Return
ETB	End Transmission Block	DEL	Delete		

Appendix B

RS232C Interface Specification

The MultiMux RS232C interface circuits have been designed to meet the electrical specifications given in the EIA (Electronic Industries Association) RS232C and CCITT (Consultative Committee of International Telegraph and Telephone) standards. All signals generated by the mux are approximately 10 volts when measured across a load of 300 ohms or greater. The receiving circuits of the mux will accept signals in the 3 to 25 volt range. The voltage thresholds are:

Negative = voltage more negative than -3 volts with respect to signal ground.
Positive = voltage more positive than +3 volts with respect to signal ground.

SIGNAL INFORMATION:	NEGATIVE	POSITIVE
Binary State	One	Zero
Signal Condition	Mark	Space
Control and Timing Function	Off	On

The input impedances of all mux circuits which accept signals from the data processing terminal or CPU equipment have DC resistances of 4.7K. For more specific details, consult the EIA RS232C standard itself.
The following chart lists the EIA RS232C interface pins and circuits present on the mux RS232C interface connector. All other pins are unused. The composite side of the mux is configured as a DTE device and the channel sides are DCE devices.

PIN ASSIGNMENT	MULTI-TECH DESIGNATION	EIA CIRCUIT	CCITT CIRCUIT	SIGNAL SOURCE*	CIRCUIT FUNCTION
2	SD	BA	103	DTE	Transmitted Data
3	RD	BB	104	DCE	Received Data
4	RTS	CA	105	DTE	Request to Send
5	CTS	CB	106	DCE	Clear to Send
6	DSR	CC	107	DCE	Data Set Ready
7	SG	AB	102	——	Signal Ground
B	CD	CF	109	DCE	Data Carrier Detector
9	+V	+V	--	DCE	Test Voltage
15	TC	DB	114	DCE	Transmit Clock
17	RC	DD	115	DCE	Receive Clock
20	TR	CD	108/2	DTE	Data Terminal Ready
22	RI	CE	125	DCE	Ring Indicator
24	XTC	DA	113	DTE	External Transmit
25	OOS	CN	142	DTE	Terminal Busy

*DTE = Data Terminal Equipment
DCE = Data Communications Equipment

The computer or terminal should be supplied with a cable terminated with a Cinch DB25P (or equivalent) connector mounted in a Cinch DB51226-1 (or equivalent) hood assembly as specified by the RS232C/V.24 standard.

Appendix C

Cabling Diagrams

Channel Cable

DCE to Channel cabling (with EIA pass Thru)

To MultiMux Channel Connector

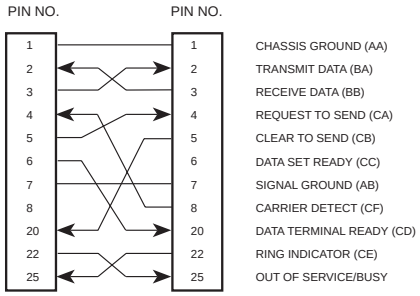

To DCE Device (Communication Device i.e. Modem)

DCE to Channel cabling (without EIA pass Thru)

To MultiMux Channel Connector

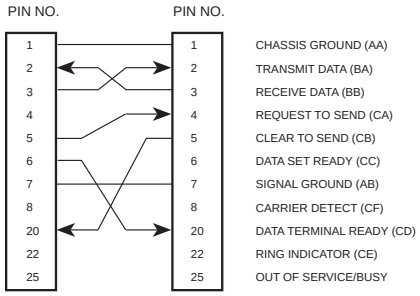

To DCE Device (Communication Device i.e. Modem)

DTE to Channel cabling

To MultiMux Channel Connector

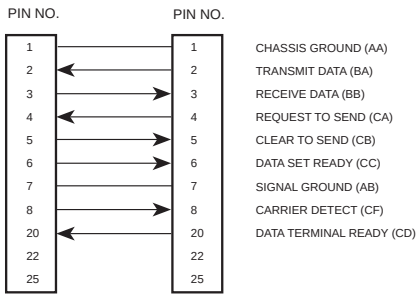

To DTE Device (Terminal Device i.e. ASCII Terminal)

Command Port Cables

DCE to DTE cabling

To MultiMux Command Port Connector

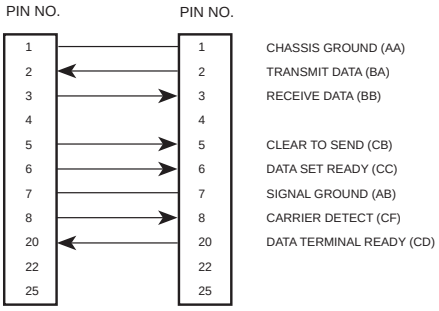

To DTE Device (Terminal Device i.e. ASCII Terminal)

DCE to DCE cabling

To MultiMux Command Port Connector

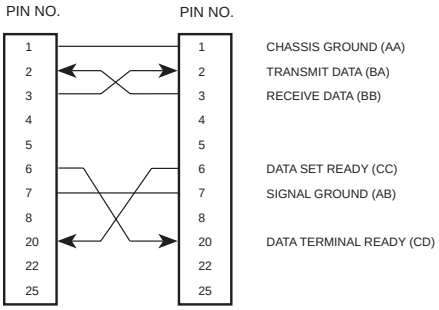

To DCE Device (Communication Device i.e. Modem)

Composite Link Cabling

RS232C/V.24 *Configured Composite Link

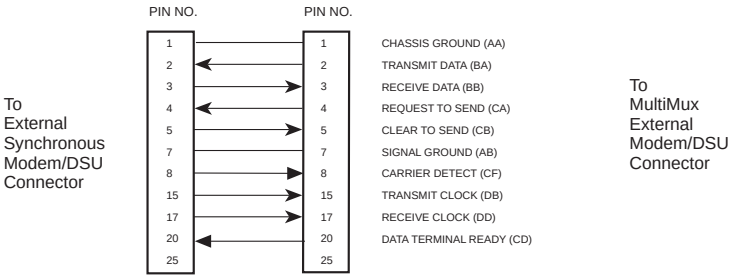

V.35 Adapter Cable Configured on a RS232C/V.35 **Composite Link

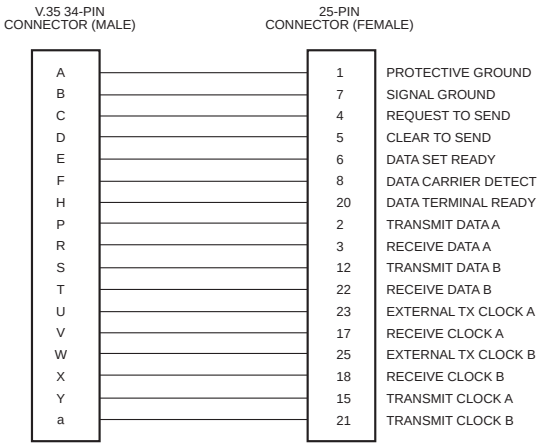

* The MultiMux RS232C interface circuits have been designed to meet the electrical specificaitons given in EIA (Electronic Industries Association RS232C and CCITT (Consultative Committee International Telegraph and Telephone) V.24 Stanards.

** When configured for V.35 interface operation on composite link A or B, the V.35 adapter cable should be used. This cable uses a 25-pin female connector at one end and a 34-pin winchester male connector at the other end.

RJ48 Cabling for Internal DSU

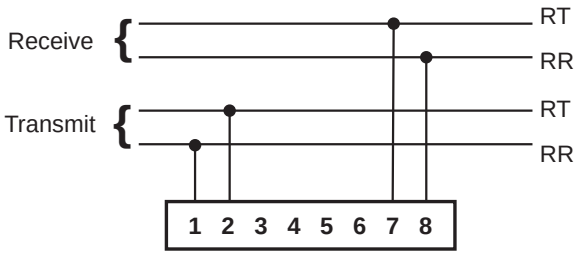

Back to Back Mux Cable

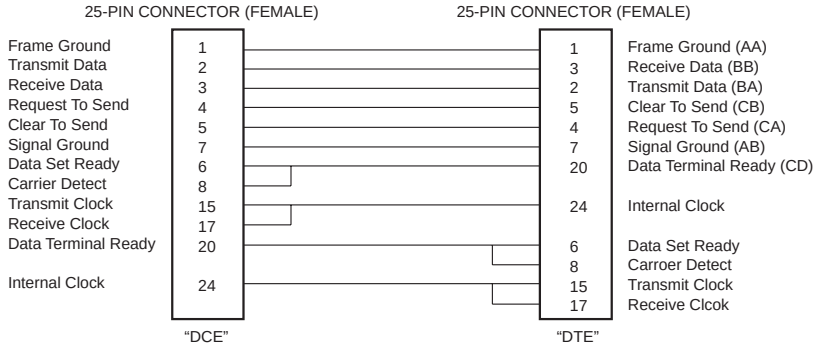

***** This cable is used to connect two muxes back to back. The cable is asymmetrical and allows one of the mux's to provide clock to the TxC and RxC pins of the other mux. Make sure the configuration of the composite links include one of them as having an internal clock and the other mux an external clock.

E&M (I-V) Voice/Fax Channel Cable

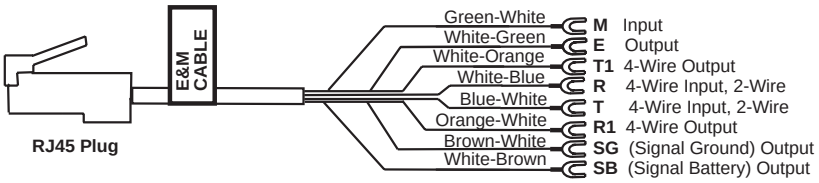

* Cable wire is solid 24AWG. If connecting to a punch block, spade lugs may be cut off.

RJ45	Spade Lug	Wire Color	Function
1	M	Green/White	Input
2	E	White/Green	Output
3	T1	White/Orange	4-Wire Output
4	R	White/Blue	4-Wire Input, 2-Wire
5	T	Blue/White	4-Wire Input, 2-Wire
6	R1	Orange/White	4-Wire Output
7	SG	Brown/White	(Signal Ground) Output
8	SB	White/Brown	(Signal Battery) Output

Voice/Fax Channel Connectors

Pin Connection

E&M	Description	FXO	Description	FXS	Description
1	M				
2	E	2	N/C	2	N/C
3	T1	3	Ring	3	Tip
4	R	4	Tip	4	Ring
5	T	5	N/C	5	N/C
6	R1				
7	SG				
8	SB				

Appendix D

Command Modem Commands

Answer A The Answer Mode forces the command modem into answer mode. Entering **ATA** when in the Command mode will immediately bring the command modem off-hook, out of the command mode and into the On-Line Answer mode, and cause it to retransmit its carrier signal over the phone line. If no responding carrier tone is received within thirty seconds (or some other time as determined by S-Register S7), the command modem will cease transmitting its tone, hang up, and go back into Command mode.

Repeat Last Command

A/ The Repeat Last Command command causes the command modem to repeat the last command that was executed. The last command will remain stored in the modem's command buffer until the Attention command (AT) is entered. Therefore AT must not be entered before an **A/** command because the **A/** will have no effect if an AT command already cleared the previous command outof the command buffer.

Bell orTone B The **B** command is used to select the frequency that the **CCITT Answer** command modem uses for its answer tone. The answer tone is the tone transmitted by a command modem receiving a call; this initiates the handshaking between the two command modems.At 2400 bps there is no conflict, because all command modems use CCITT frequencies. At the lower speeds (0-1200 bps), in the U.S., some modems use the Bell frequency of 2225 Hz. However, the CCITT specification for V.22 has an answer tone frequency of 2100 Hz. The **ATB0** command enables CCITT V.22 (2100 Hz) frequency. The **ATB1** command enables Bell 212A (2225 Hz) frequency. **ATB1** is the factory default.

Dial D The letter D in a command will cause the command modem to dial the telephone number immediately following it. For example, if you enter **ATD5551212** and hit Return, the command modem will dial the number 555-1212. Valid dial characters are 0 through 9, A through D, **#** , and *. Dial modifiers are: , P R S=x T W ; @ and !. In pulse dialing, non- digit characters have no meaning. The Dial command can also be used in conjunction with a telephone set for manual dialing. You would dial the number on your telephone set, and after hearing the high-pitched answer tone on your handset, you would enter **ATD** on your keyboard and hit Return. You would then hang up the handset. Unless you have a specific need to dial in this manner, we recommend you use the first method, where the telephone number is entered on your keyboard.

Echo Command Mode Characters

E0-1 If the command modem is connected to a full duplex terminal or computer, it will be necessary for the modem to be configured to echo back characters entered while in the command mode in order for them to be displayed. The **E** command is used to configure the Command mode echo, with **ATE0** disabling the echo and **ATE1** enabling the echo.

If neither method is selected, the factory default will cause the modem to echo the command characters.

Load Command

&F The Load Command Modem Factory Default **&F** Command resets the S-Registers and command modem commands to the **Modem**factory default values. They are as follows:

Factory Defaults

S-Registers: S0=0, S1=0, S2=43, S3=13, S4=10, S5=8, S6=2, S7=30, S8=2, S9=6, S10=14, S11=95, S12=50, S18=0, S25=5, S26=1, and S28=0.

Commands:

Command	Name	Default
B1	Answer Tone:	Bell
E1	Echo:	Enabled
P	Dialing:	Pulse
Q0	Result Codes:	Enabled
V1	Result Codes:	Word
X4	Result Code Set/ Call Progress:	Dial Tone & Busy

Hanging Up, and Bringing the Phone Line Off Hook

H0-1

You can make the command modem hang up (go On Hook), or go Off Hook, with the **H** command. Entering **ATH1** (upper case) will bring the line Off Hook just as if you had picked up the telephone handset. The command modem remains in command mode.

You can hang up by entering **ATH0** or **ATH** (remember that the default value is 0 when nothing is entered). It is not necessary to use the **H1** command to bring the line Off Hook when using the command modem D command to dial, since the modem will go off hook automatically when you hit Return at the end of the Dial command.

Inquiry for Product Code

I

Some systems or software packages may automatically check the "identification" of the modem with which they are communicating, by using the **I** command. This "read" command enables the software to determine the type of modem with which it is communicating.

When **ATI** or **ATI0** (upper case) is entered, the command modem will respond with xxx, with the first two digits indicating model, and the third digit indicating the revision level.

Exiting Command Mode, Going Back On-LIne

O

You can bring the command modem out of command mode back into the On-Line Mode, by entering **ATO** (where O is the letter O, not the number 0). In this case, the **O** command reverses what was done by entering the Escape code (see Escape Code +++ explanation).

Pulse or Tone Dialing

P

T

The command modem will dial numbers using either pulse or tone dialing, or in a combination of both methods. Pulse dialing is the method used by rotary-dial telephones, which involve the timed opening and closing of a line relay. Tone dialing is that used by push button Touch-Tone telephones, and is sometimes referred to as DTMF, or Dual-Tone Multi-Frequency dialing.

This is controlled by including a P for Pulse or a T for Tone in the dialing command, right before the digits you wish to have dialed in that manner.

For example, you would pulse-dial the number 555-1212 by entering **ATDP5551212** and hitting Return. You could tone-dial the same number by entering **ATDT5551212** and hitting Return.

If neither Pulse or Tone dialing is specified in the dialing command, the command modem will use whatever method was last used. If the modem was reset or just powered up, it will use Pulse dialing, even if you do not use the letter P in your dial command.

Nearly all telephone systems in the U.S. are now compatible with tone dialing. Since that is the faster method, you will probably choose the tone method for your dialing.

An example of combining pulse and tone dialing could involve a PBX system where 9 had to be pulse-dialed first, then the rest of the number tone-dialed after pausing for a second dial tone. The number would be dialed by entering **ATDP9,T5551212** and hitting Return. (The comma causes a pause, which we'll explain soon.)

Result Codes Enabled or Disabled

Q0-1

It may be desirable to disable the Result Codes (see V command) altogether in certain applications, such as computer-controlled auto dialing. The **Q** command is used to do this, with **ATQ1** disabling the Result Code transmissions and **ATQ0** (or **ATQ)** enabling them. If you do not select either method, the factory default setting will enable the Result Codes to be sent.

Forcing an Answer Tone,

To dial up another modem that is in Originate mode, your modem must be in Answer mode to initiate the "handshaking" and establishment of a connection. This is done automatically

in the Dialing R

when the command letter **R** is entered at the end of a dialing command. When this is done, the command modem will switch to Answer mode as soon as the number is dialed and then transmit a carrier signal to the other modem.

For example, entering **ATD5551212R** and hitting Return would cause the number 555-1212 to be dialed and cause the command modem to transmit a carrier signal at the end of the dialing sequence.

S-Register Read or Write Sn? SN=xxx

The **S** command can be used to both assign a value to or read the current value of an S-Register. (Refer toAppendix E of this manual for the function of each S-Register.) The format for reading an S-register is to enter the letter S (upper case) followed by the register number and a question mark ? and then hit Return. For example, entering **ATS7?** and hitting Return will display the value of S-Register 7 in a 3 digit Decimal form. The number 30 would appear as 030, and the number 255 would appear as 255.

The format for assigning a value to an S-register is to enter the letter S followed by the register number followed by an equal sign, and then enter the new value in a decimal format. ASCII characters will have to be converted to their decimal equivalents before being entered. S-Register decimal values can range from 0 to 127 for ASCII characters, or from 0 to 255 for numeric values. A complete ASCII character Code/Hex/Decimal conversion chart is located in Appendix A.

For example, if you wish to have longer pauses caused by the comma in a dialing command, enter **ATS8=5** to assign 5 as the value for the S-Register S8 (meaning that the modem will pause five seconds for the comma in the dialing command instead of the normal two). Or, if you wish to configure the command modem to answer incoming calls after the 30th ring, instead of after the first ring, enter **ATS0=30** and hit Return to assign the value 30 to S-Register S0.

Once an S-Register is selected, it remains selected until another register is selected. The value of that S-Register can then be read by entering **AT?** and changed by entering **AT=** and the new value.

Result Codes-Word or Digit V0-1

The command modem can display its Result Codes on your supervisory console. These codes can appear either in word ("verbose") or single digit ("terse") form.

For example, if after dialing, no carrier signal is detected, the result can be displayed either as NO CARRIER or as the digit 3. The **V** command is used to determine which method is used.

Entering **ATV0** will cause the command modem to display the Result Codes as digits, while **ATV1** will display them as words. If you do not select a method, the factory default setting will cause the command modem to use the verbose results.

The following shows the terse and verbose result codes and a description of each code.

Terse	Verbose	Description
0	OK	Your command was executed without errors.
1	CONNECT	A carrier signal has been detected 300 bps.
2	RING	A ring signal has been detected from an incoming call.
3	NO CARRIER	No carrier signal has been detected, or the carrier signal was lost.
4	ERROR	An error is present in your command sequence, e.g. invalid characters or too many characters.
5	CONNECT 1200	A carrier signal has been detected at 1200 bps.
10	CONNECT 2400	A carrier signal has been detected at 2400 bps.

13 DATA Command modem connected as data modem during auto answer.

You can also choose to completely eliminate the display of all of the Result Codes. This is accomplished by executing the **Q** command.

View Active Configuration and User Profiles

The View Active Configuration and User Profiles **&V** command displays the commands and S-Register settings along with the stored telephone numbers. A typical example of active and stored profiles and stored telephone numbers are as follows:

&V

```
ACTIVE PROFILE:
B1 E1 H0 Q0 V1 X4 Y0 &G0 &P0 &T4 &Y
S00:000 S01:000 S02:043 S03:013 S04:010 S05:008 S06:002 S07:030 S08:002 S09:006
S10:014 S12:050 S14:AAH S16:00H S18:000 S21:00H S22:76H S23:07H S25:005 S26:001S027:40H S28:00H

STORED PROFILE 0:
B1 E1 H0 Q0 V1 X4 Y0 &G0 &P0 &T4
S00:000 S14:AAH S18:000 S21:00H S22:76H S23:15H S25:005 S26:001S027:40H
S28:00H

STORED PROFILE 1:
B1 E1 H0 Q0 V1 X4 Y0 &G0 &P0 &T4
S00:000 S14:AAH S18:000 S21:00H S22:76H S23:17H S25:005 S26:001S027:40H
S28:00H

TELEPHONE NUMBERS:
&Z0= 18009722439
&Z1= 6127859875
&Z2=
&Z3=
```

Wait for Dial Tone

The W command causes the command modem to wait up to a specified time for the dial tone to occur. The telephone number is dialed immediately upon dial tone detection. The S-Register S7 value determines the maximum wait time. If a busy signal is detected instead of dial tone, the command modem returns a BUSY result code and goes On-Hook, abandoning subsequent instructions on the command line. The factory default setting is 30 seconds

W

Store Active Profile

The Store Active Profile &W command writes the storable parameters of the active configuration to one of two profiles in NVRAM. The current values of the following commands and registers are stored:

&W0-1

Commands: Bn, En, Qn, Vn, Xn, &Gn, &Pn, and &Yn

S-Registers: S0, S14, S18, S21, S22, S23, S25, S26, S27, and S28

The **&W0** command stores the active profile in the NONVRAM at location zero and **&W1** stores the active profile in location one. **&W0** is the factory default setting.

Result Code Set/ Call Progress

The Result Code Set/Call Progress (**X**) command selects which set of responses and dialing functions are active in Command mode. You can choose to have certain responses suppressed, such as the speed of the connection, and whether or not dial tone and busy signal are detected. You can choose either the basic result code set (i.e., the connect response with no speed indication of the called command modem) or the extended result code set (i.e., connection response with speed indication) and whether or not call progress is activated.

X

The **ATX0** and **ATX1** commands disable the call progress functions (dial tone and busy signal) and activates either the basic or extended result codes. This call progress method is referred to as dumb dialing where actual dial tones are not detected, instead the command modem relies on timed pauses. The **ATX0** enables the basic result codes while the **ATX1** enables the extended result codes with call progress disabled on both commands.

The **ATX2** through **ATX4** commands determine whether or not call progress is activated and extended result codes are enabled on each of these commands.

The **ATX2** command waits for a dial tone before dialing. The connect response and speed indication (e.g.,CONNECT xxxx where as xxxx is the connect speed of 2400 bps) are enabled upon detection of a dial tone. Busy signal is not detected.

The **ATX3** command causes the command modem to dial blind(i.e., does not wait for dial tone) and enable a BUSY result code if a busy signal is detected. This feature is useful because it allows the command modem to immediately abandon a call rather than wait the thrity seconds for a carrier signal that will never come.

The **ATX4** command causes the command modem to wait for a dial tone before dialing. This command is referred to as the smart dialing method where as the **ATX3** command is referred to as blind dialing. The CONNECT xxxx result codes are activated and the BUSY result code is enabled if a busy signal is detected from the called command modem. The **ATX4** command is the factory default setting.

The Result Code Set/Call Progress X commands are summarized below.

ATX0 Basic result codes are enabled. Dumb dialing (dial tone and busy signal) capability is provided.

ATX1 Extended result codes are enabled. Dumb dialing capability is provided.

ATX2 Wait for dial tone before dialing is enabled. Extended result codes are enabled. Busy signal is not detected.

ATX3 Blind dialing is enabled along with extended result codes. Busy result code is enabled if the busy signal is detected.

ATX4 Smart dialing is enabled with extended result codes. Smart dialing provides dial tone and busy signal detection. **ATX4** is the factory default setting.

Select Stored Profile on Power Up

The Select Stored Profile on Power Up **&Y** command determines which stored profile is established on power up or reset of the command modem. The **&Y0** command selects stored profile 0 and **&Y1** selects stored profile 1 on power up or reset. The profile is stored using the **&W** command. **&Y0** is the factory default setting.

Recall Stored Profiles &Z0-3=x

The **Z** command causes the command modem to retreive the stored configuration from non-volatile memory (NVRAM) and store it in the active configuration area. The command mode buffer is cleared after the **Z** command is executed. The **ATZ0** command loads profile 0 into the active configuration area and **ATZ1** command loads profile 1. The active profiles are stored using the **&W** command and viewed using the **&V** command which are explained earlier in this section.

Store Telephone Number ATDSx &Z0-3=x

The Store Telephone Number **&Z** command causes the command modem to store up to four strings of telephone numbers into NVRAM for later recall by the Dial Stored Number command. The format for this command is **&Z** and up to a 36 character telephone number and/or dialing modifiers which are stored at location 0. If the command format is **&Z=** (=is a delimiter) with no number preceding the delimiter, this telephone number is also stored at location 0. If the format of this command is **&Zx=** where the number preceding the delimiter is between 0 and 3, the telephone number and/or dialing modifiers are stored at the loaction specified by the number preceding the delimiter. The following characters are allowed to be stored: 0 through 9, A through D, T P R W **#** * , ! ; along with the delimiter (=).

Dial Digits/ Characters

Digits 0 through 9 and characters A through D, **#** and * are valid dial characters. Characters A through D, **#** and * represent specific tone pairs and therefore, can be used only when tone dialing.

0 to 9, A to D, # and *

Wait for Quiet Answer @

The Wait for Quiet Answer **@** command causes the command modem to look for rings followed by 5 seconds of silence before processing the next symbol in the dial command. This command is used for accessing a system that does not provide a dial tone. S-Register S7 determines the maximum wait time. If Quiet Answer is detected, the dial modifiers following the command are executed. If busy is detected, the command modem returns a BUSY result code and goes to the hang-up process, aborting further execution of commands.

Flash On Hook !

The Flash On Hook **!** command causes the command modem to to go on hook for 0.75 second. Some switch-board systems react to a momentary on hook state. An exclamation point inserted in the dialing command causes the command to flash on hook for three-quarters of a second, just as if you had depressed the disconnect button (on the handset cradle) momentarily.

Automatic Pauses in Dialing

You can cause the command modem to pause during the dialing sequence by entering a comma character where the pause is desired. This pause will last two seconds. If a longer

pause is desired, more than one comma may be entered

, consecutively, with each one causing a two second pause. You also have the option of changing the length of the pause of the comma, from two seconds to any other value from 0 up to 255 seconds. This is accomplished by accessing S-Register S8, which we explain in Appendix E.

Each comma used in a dialing command does count as one of the forty allowed characters.

Returning to Command Mode After Dial Command Execution

A semicolon (**;**), when entered as the last character of a dialing command, will cause the command modem to return to the Command mode immediately after executing the command, instead of waiting for a carrier signal and going on line.

For example, entering **ATDT5551212;** would simply tone-dial the number, and do nothing afterwards except go back into **;** Command mode. This can be useful in dialing applications where command modem data transfer is not desired, such as voice communications.

Escape Sequences-Entering Command Mode While Still On-Line

It is possible to cause the command modem to enter the command mode after the command modem has gone on-line without disconnecting the call. This is accomplished by entering an Escape code. The default Escape code is three plus signs (+++). You need not hit Return.The Escape code character may be changed by accessing S-Register S2 which is explained in Appendix E.

+++ There is a safety factor built into the command modem, that requires about one second of silent time before and after the Escape code **+++** is entered, to prevent accidental escapes into the Command mode. The command modem will not release the telephone line until it receives an ATH or ATZ command, or it detects loss of carrier.

Appendix E

Indicators/Switches and Connectors

Indicators

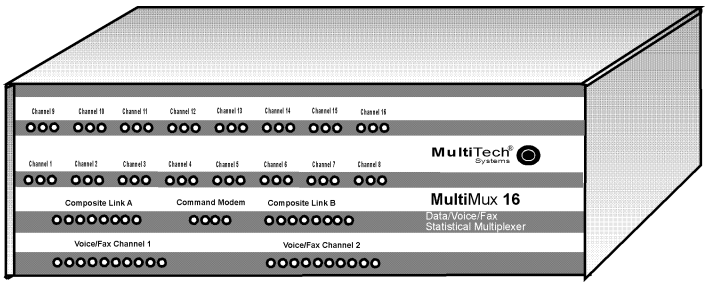

Figure E-1. MultiMux Front Panel

Table E-1. LED Indicators

Indicator	Description
	Channel
XMT/RCV	The Channel Transmit (XMT) and Receive (RCV) indicators show the activity level on each channel. MultiMux MMV1608 uses Channel One through Channel Eight indicators, MMV1616 uses Channel One through 16, MMV3224 uses Channel One through Channel 24, and finally MMV3232 uses Channel One through 32.
FC	The Flow Control (FC) indicator is On when the MultiMux has stopped the channel data, because the channel cannot accept any more data. If the channel data is being stopped by a remote device, the FC indicator on the host MultiMux lights. The Flow Control Received (FCR) indicator on the affected composite link also lights. If the channel data is being stopped by one of the composite links, only the FC indicator for the affected channel lights.

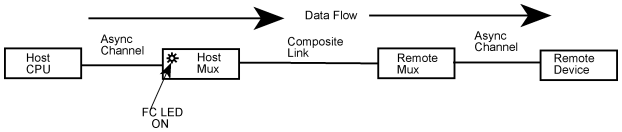

Table E-1. LED Indicators (Continued)

Indicator	Description
	Composite Link A/B
CD	The Carrier Detect (CD) indicator lights when the composite link detects a carrier signal from the remote MultiMux. The CD indicator lights when a carrier signal is detected for an internal DSU and when an external device (DSU or composite link modem) is connected to the composite link, and is detecting a valid carrier.
RCV	The Receive (RCV) indicator flashes as data is being received from the remote multiplexer. The RCV indidator flashes for both internal DSU and an external link device.
XMT	The Transmit (XMT) indicator flashes as data is being transmitted to the remote multiplexer. The XMT indicator flashes for both internal DSU and an external link device.
CTS	The Clear To Send (CTS) indicator lights when the composite link is ready to transmit data. The CTS indicator lights for both internal DSU and an external link device.
RXT	The Retransmit (RXT) indicator lights when the local MultiMux has received a request to retransmit a block of data and is retransmitting that block. The RXT indicator lights for both internal DSU and an external link device.

FCR The Flow Control Received (FCR) indicator lights when the remote MultiMux's buffers are full and the local MultiMux has been told to stop sending data. The FCR indicator will only come On when flow control is active. The FCR indicator lights for both internal DSU and an external link device.

RD The Remote Down (RD) indicator lights when the local MultiMux cannot extablish communications with the remote MultiMux. The RD indicator lights for both internal DSU and an external link device.

TM The Test Mode (TM) indicator lights when the MultiMux is placed in test mode. Refer to Chapter 7 for test mode operation.

Table 3-1. LED Indicators (Continued)

Indicator	Description

Command Modem

CD Indicates the local command modem has detected a carrier signal from a remote command modem.

RCV/XMT Indicates that the command modem is on-line by flashing with data activity between the two command modems.

OH Indicates that the dial-up line for the command modem is off-hook.

Voice/Fax Channels

FXS The Foreign Exchange Station (FXS) indicator lights when the designated channel is configured for FXS operation.

FXO The Foreign Exchange Office (FXO) indicator lights when the designated channel is configured for FXO operation.

E&M The Ear and Mouth (E&M) indicator lights when the designated channel is configured for E&M operation.

VCE The voice (VCE) indicator lights when voice traffic is active on the designated channel.

FAX The FAX indicator lights when fax traffic is active on the designated channel.

XMT The transmit (XMT) indicator lights when voice or fax data is being transmitted on the designated channel.

RCV The receive (RCV) indicator lights when voice or fax data is being received on the designated channel.

XSG The transmit signal (XSG) LED lights when the FXS configured channel is off-hook, the FXO configured channel is receiving a ring from the telco, or the M lead is active when the voice/fax channel is configured for E&M opeation.

RSG The receive signal (RSG) LED lights when the FXS configured channel is ringing or the E lead is active on the E&M configured channel.

TM The test mode (TM) indicator lights when a test is being performed on a voice/fax channel.

Back Panel

The cable connections for the MultiMux are made at the back panel. Refer to Chapter 4 for cabling installation procedures. Refer to Appendix D for cabling diagrams. The MultiMux back panel is shown in Figure E-2.

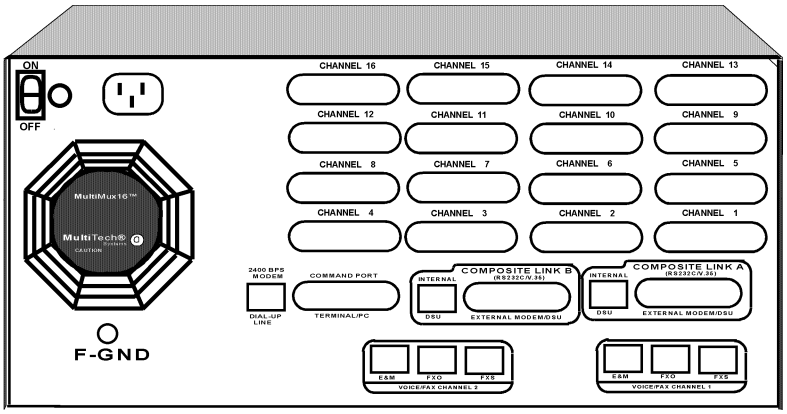

Figure E-2. Back Panel

ON/OFF Switch

This switch provides AC power to the MultiMux when placed in the On (UP) position and removes power when in the OFF (down) position.

Power Connector

The power connector is a receptacle for the 3-prong grounded power cord supplied with the MultiMux.

CHANNEL 1-16, CHANNEL 1-32

Channel 1 through channel 16 or channel 1 through 32, depending on MultiMux model, are used to connect the async devices. These connectors provide the RS232C connection.

2400 BPS MODEM DIAL-UP LINE Connector

This connector is used when the command modem is connected to a separate dial-up line for remote access.

COMMAND PORT TERMINAL/PC Connector

The command port terminal/pc connector is used to connect the supervisory console to the MultiMux. The supervisory console can be either an ASCII terminal or a pc with a serial port running communications software. The command port connector has a DCE physical interface with a DB25 female connector.

COMPOSITE LINK A INTERNAL DSU Connector

The composite link A internal DSU connector is used to connect the internal DSU on link A to the DDS or dedicated network . This connector provides an RJ48 connection.

COMPOSITE LINK A EXTERNAL MODEM/DSU Connector

The composite link A external modem/DSU connector is used when either a compatible external composite link modem or external DSU is connected to the MultiMux. This connection can be either RS232C or V.35. If the connection is V.35, then the composite link A shunt on the aggregate board must be moved from the RS232C (default) position to the V.35 position. This connector is a DB25 female connection.

COMPOSITE LINK B INTERNAL DSU Connector

The composite link B internal DSU connector is used to connect the internal DSU on link B to the DDS or dedicated network . This connector provides an RJ48 connection.

COMPOSITE LINK B EXTERNAL MODEM/DSU Connector

The composite link B external modem/DSU connector is used when either a compatible external composite link modem or DSU is connected to the MultiMux or the connection is used to connect a synchronous device. This connection can be either RS232C or V.35. If the connection is V.35, then the composite link B shunt on the aggregate board must be moved from the RS232C (default) position to the V.35 position. This connector is a DB25 male connection.

VOICE/FAX CHANNEL 2 E&M Connector

The voice/fax channel 2 E&M (Ear and Mouth) connector is used to connect channel 2 of the MultiMux to the trunk side of the local private branch exchange (PBX, a small switch). This connector is used when the voice/fax feature is included in the MultiMux. The E&M connector is an RJ48S 8-position keyed jack.

VOICE/FAX CHANNEL 2 FXS Connector

The voice/fax channel 2 FXS (Foreign Exchange Station) connector is used to connect channel 2 of the MultiMux to a station instrument (telephone, KTS - key telephone system, or fax machine). This connector is used when the voice/fax feature is included in the MultiMux. The FXS connector is an RJ11 jack.

VOICE/FAX CHANNEL 2 FXO Connector

The voice/fax channel 2 FXO (Foreign Exchange Office) connector is used to connect channel 2 of the MultiMux to the station side of the local private branch exchange (PBX, a small switch). This connection is also commonly referred to as an OPX - Off Premises Extension. This connector is used when the voice/fax feature is included in the MultiMux. The FXO connector is an RJ11 jack.

VOICE/FAX CHANNEL 1 E&M Connector

The voice/fax channel 1 E&M (Ear and Mouth) connector is used to connect channel 1 of the MultiMux to the trunk side of the local private branch exchange (PBX, a small switch). This connector is used when the voice/fax feature is included in the MultiMux. The E&M connector is an RJ48S 8-position keyed jack.

VOICE/FAX CHANNEL 1 FXS Connector

The voice/fax channel 1 FXS (Foreign Exchange Station) connector is used to connect channel 1 of the MultiMux to a station instrument (telephone, KTS - key telephone system, or fax machine). This connector is used when the voice/fax feature is included in the MultiMux. The FXS connector is an RJ11 jack.

VOICE/FAX CHANNEL 1 FXO Connector

The voice/fax channel 1 FXO (Foreign Exchange Office) connector is used to connect channel 1 of the MultiMux to the station side of the local private branch exchange (PBX, a small switch). This connection is also commonly referred to as an OPX - Off Premises Exchange. This connector is used when the voice/fax feature is included in the MultiMux. The FXO connector is an RJ11 jack.

Switches and shunts

Switch settings can be changed by taking off the front panel and locating the switches on either the aggregate or channel board(s). The initiate downline load, external/internal DSU, channel size, and remote access to the command modem DIP switches are located on the Aggregate board. The channel board(s) contian the switches that indicate which channel numbers that particular board represents, 1-8, 9-16 etc. The pc board orientation, switches and shunts are shown in Figure E-3.

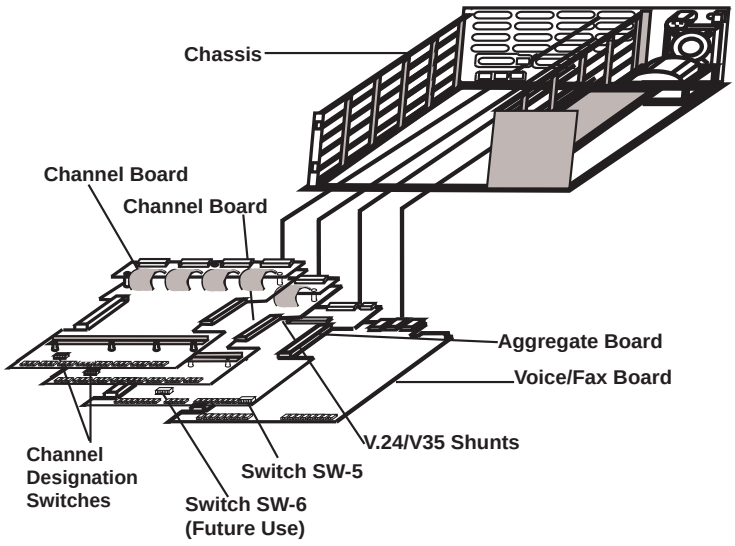

Figure E-3. Switches and Shunts

Aggregate Board Switch SW-5

The aggregate board 8-position DIP switch SW-5 is shown in Figure E-3 and the function of each position is as follows:

Switch position 1:	Closed	Initiate Downline Load Off
	Open(UP)	Initiate Downline Load On (used for downline loading only)
Switch position 2:	Closed	External Link A Device Selected
	Open (UP)	Internal Link A DSU Selected
Switch Position 3:	Closed	External Link B Device Selected
	Open (UP)	Internal Link B DSU Selected

Channel #	**8**	**16**	**24**	**32**
Switch Position 4:	C	O	C	O
Switch Position 5:	C	C	O	O

C= Closed, O=Open

Switch Position 6:	Closed	Disable Command Modem Remote Access
	Open (UP) (default)	Enable Command Modem Remote Access
Switch Position 7:	Not Used	
Switch Position 8:	Not Used	

Channel Board Number of Channels Switch

The Channel board four-position DIP switch determines which channel numbers a particular channel board represents. The first channel board needs to be installed in the third slot from the bottom of the chassis and the 4-position DIP switch on that board has to be set with switch positions SW-1 and SW-2 in the closed position. If the MultiMux has 16 channels, then two channel boards are installed in the chassis and the channel board in the fourth slot from the bottom of the chassis has switch position SW-1 in the open position and SW-2 in the closed position. The function of the switch is as follows:

Channel #	**1-8**	**9-16**	**17-24**	**25-32**
Switch Position 1:	C	O	C	O
Switch Position 2:	C	C	O	O

C= Closed, O=Open

RS232C/V.35 Shunt

An external composite link modem or DSU with either an RS232C/V.24 or a V.35 interface can be connected to a MultiMux MMV1600/3200 series. The aggregate board has four shunt locations on the board, two positions for composite link A and two for composite link B and each link can connect either an RS232C or a V.35 interface. When an external composite link modem with an RS232C/V.24 interface is connected to one of the composite links, the V.24 shunt for that composite link is installed on the aggregate board. When the external composite link modem or DSU has a V.35 interface, the shunt for that composite link has to be moved from the default position (RS232C/V.24) to the V.35 position. The shunts are shown in Figure E-4. The factory default position for the shunts is in the RS232C/V.24 position.

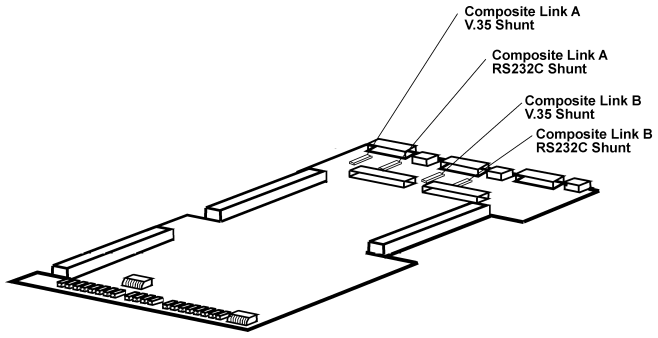

Figure E-4. RS232C/V.35 Shunts

Appendix F

Flow Control Background

Flow control refers to the techniques used by computer devices and multiplexers to stop and restart the flow of data from each other. Flow control is necessary so that a channel device does not receive more data than it can handle or vice versa (the MultiMux receives more data than its buffers can accommodate). Flow control by the mux to control data flow from a channel device is called Mux Initiated Flow Control. Such flow control might be needed if a mux was connected to a minicomputer that could output more data than the mux could handle. Flow control by the channel device to control data flow from the mux is called Channel Device Initiated Pacing. Such pacing might be required by a printer channel device which could not print data as fast as the mux might send it or might go off-line for some reason like running out of paper. To state it simply, “Flow Control” is something the mux does to the channel device, while “pacing” is something the channel device does to the mux.

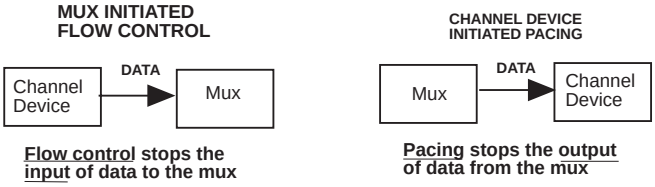

Flow control can be software or hardware based. In software flow control, special characters (Xon and Xoff) are used to stop and start the flow of data. In hardware flow control the Clear To Send (CTS) signal on the RS232C interface (pin 5) is brought low to stop data and high to restart it. When you select a flow control method with a mux command you are also selecting the corresponding pacing method.
In the example below we have an eight port multi-user minicomputer connected to a MultiMux on one end of a link and seven terminals plus a printer connected to another MultiMux on the other end of the link. The MultiMux at the printer end needs Flow Control and Pace on the printer channel to stop and restart data from the minicomputer. The MultiMux at the minicomputer end needs Flow Control on to all channels to stop and restart data from the minicomputer so that the mux’s buffer capacity is not exceeded. We chose Xon/Xoff flow control for this example and are setting pace ON for all channel devices.

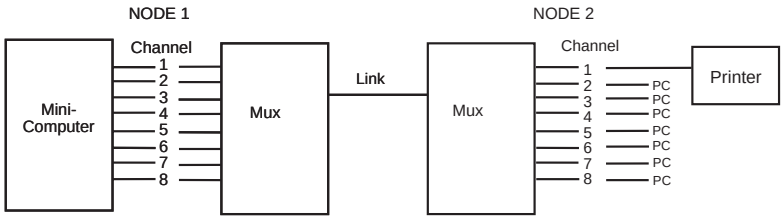

MiniComputer Flow Control

In the example below, the flow control on the minicomputer works as follows:

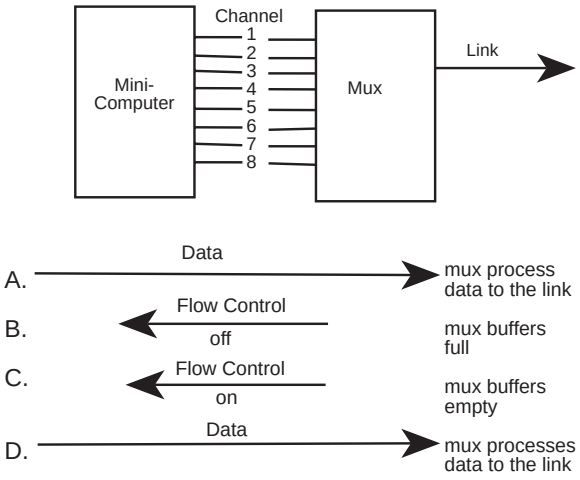

A. Data volume from the mini for any particular channel is appropriate for the mux to process and transfer on to the link.

B. Data overwhelms a channel's mux buffer and the mux sends a stop data Flow Control (OFF) signal to the mini stopping data output.

C. The mux buffer sufficiently enpties to allow additional data transfer, so the mux sends a start data Flow Control (ON) signal to the mini.

D. Data from the mini again flows through the channel.

Printer pacing and Flow Control

The example below shows how Pacing and Flow Control work on a printer.

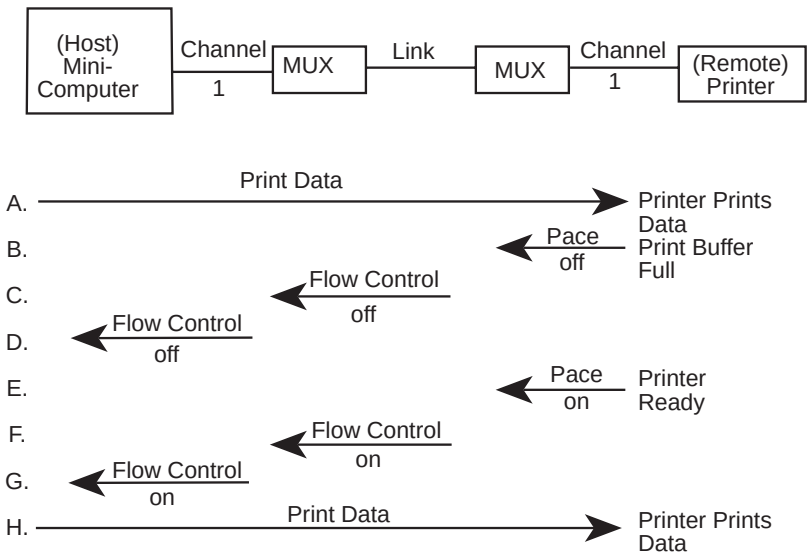

A. Print data volume from the mini is appropriate for the printer to process and print it.

B. The printer cannot handle any more data due to its buffers being full and it issues a Pace OFF signal to the mux.

C. The remote mux sends a Flow Control OFF signal to the other mux and uses its buffer to store any pending print data.

D. The host mux sends a Flow Control OFF signal to the mini and uses its buffer to store any pending print data.

E,F,G. The printer buffer empties and is ready for more print data, so it issues a Pace ON signal which, in turn, causes a Flow Control ON signal through to the mini.

H. Print data from the mini resumes.

Glossary of Terms

A

AC (Alternating Current): A power source whose signal crosses a reference voltage (usually called ground or zero). Alternating between a maximum and minimum voltage, AC may also be referred to as a bipolar signal. Contrast with DC.

ACK (ACKnowledgement code) (pronounced "ack"): A communications code sent from a receiving modem to a transmitting modem to indicate that it is ready to accept data. It is also used to acknowledge the error-free receipt of transmitted data. Contrast with NAK.

Address: A numbered location inside a computer. It's how the computer accesses its resources, like a video card, serial ports, memory, etc.

Alphanumeric: The basic character set which includes the letters A to Z (and a to z) and the digits 0 to 9.

Amplitude: The difference between the maximum and minimum voltages of a waveform expressed as a "peak-to-peak" voltage.

Amplifier: An active device within a circuit which increases the voltage level of all signals (desirable and undesirable).

Analog loopback: A modem diagnostic used to test either the local analog loop (the modem's internal circuitry) or the remote analog loop (the telephone line). The local analog loop test is accomplished by activating the self-test mode and tying the modem's modulator to its demodulator and examining the return stream of data at the PC or terminal it services. The remote analog loopback can only be activated on four-wire leased line connections with a remote modem capable of performing the same test.

Analog signal: A waveform which has amplitude, frequency and phase, and which takes on a range of values between its maximum and minimum points. Analog implies continuous movement from point A to point B, as opposed to discrete jumps. For example, sound is continuously varying air vibrations and is converted into analogous electrical signals to be carried on a telephone line.

Analog Transmission: One of two types of telecommunications which uses an analog signal as a carrier of voice, data, video, etc. An analog signal becomes a carrier when it is modulated by altering its phase, amplitude and frequency to correspond with the source signal. Compare with digital transmission.

ANSI (American National Standards Institute) (pronounced "ansy"): A U.S. standards organization supported by over 1000 companies and trade organizations. It is a non-profit, non-government group that is the U.S. member of the ISO (International Standards Organization).

ANSI character set: An 8-bit character set that contains 256 characters. The first 128 characters are alphanumeric punctuation and the second 128 contain math and foreign language symbols.

ASCII (American Standard Code for Information Interchange) (pronounced "askey"): A binary code for data that is used in communications and in many computers and terminals. The code is used to represent numbers, letters, punctuation and control characters. The basic ASCII code is a 7-bit character set which defines 128 possible characters. The extended ASCII file provides 255 characters.

Asynchronous Transmission: The transmission of data in which each character is a self-contained unit with its own start and stop bits. This is a common method of transmission between a computer and a modem. One character at a time, encoded into a series of electrical pulses, is transmitted or received. This is the oldest method of data transfer. When it is used with error correcting software and data compression algorithms, along with the increase in maximum attainable speeds, it continues to be a viable alternative to synchronous transmission..

Auto Answer: A modem feature which enables the modem to go "off-hook" when it detects an incoming call.

Auto Dial: Some modems provide this feature for asynchronous dialing. This feature is a predefined macro that allows the user to enter the location of a phone number (i.e., N0 through N9) and have the modem go off hook, dial and establish the connection. With the auto dial feature, an asynchronous terminal can establish a dialing directory without running a communication software package.

B

Baud: Baud is rate, the signalling rate of a line, the switching speed, or the number of transitions (voltage or frequency changes) that are made per second. Transmission speeds are often expressed in baud, though bits per second is more accurate. The speed at which your computer talks to your modem.

BCC (Block Check Character): An error control method used in character-oriented or byte-synchronous protocols. Two 8-bit BCC's are used to create the CRC (Cyclic Redundancy Check) field of a synchronous data packet.

Bell 103: The U.S. modulation standard for 300 bps full-duplex transmission over dial-up lines.

Bell 212A: The U.S. modulation standard for 1200 bps full-duplex transmission over dial-up lines.

Binary: A numbering system based on two digits, 1 and 0 which is conducive to the two-state digital electronics used within computers. All input to a computer is encoded as a binary value. Binary also refers to a file format that uses 8-bit characters, to allow for control characters (i.e., all non-ASCII files).

BSC (Binary Synchronous Communications): Also called "bisync", this communications protocol was the first synchronous data format used by IBM. It is still in use, but is rapidly being replaced by IBM's newer Synchronous Data Link Control (SDLC). Bisync is a byte-synchronous protocol that has longer delays and more overhead than the bit-synchronous SDLC. It uses two synchronization characters to head every packet.

Bit (Binary digIT): A bit is the basis of the binary number system. It can take the value of 1 or 0. Bits are generally recognized as the electrical charge generated or stored by a computer that represent some portion of usable information.

Bit-synchronous transmission: A synchronous form of data transmission that focuses on a maximum packet size rather than the length of the characters the packet contains. SDLC is a bit-synchronous protocol.

Boot: To start or restart your PC. This term originates from the saying " to pull oneself up by the bootstraps".

Bps (bits per second): A unit to measure the speed at which data bits can be transmitted or received. Bps differs from baud when more than one bit is represented by a single cycle of the carrier.

Buffer: A temporary storage register or Random Access Memory (RAM) used in all aspects of data communications which prevents data from being lost due to differences in transmission speed. Keyboards, serial ports, muxes and printers are a few examples of the devices that contain buffers. A buffer allows one device to dump data at a high speed and for the lower-speed device to accept it at its own pace. In this way , the high-speed device can continue its work without having to wait for its data transfer to end. Buffers are a way of preventing potential data loss.

Bus: A common channel between hardware devices either internally between components in a computer, or externally between stations in a communications network.

Byte: The unit of information a computer can handle at one time. The most common understanding is that a byte consists of 8 binary digits (bits), because that's what computers (PCS) can handle. A byte holds the equivalent of a single character (such as the letter A).

C

Capacitor: An electronic device that stores an electrical charge. It comes in varying sizes for use in anything from power supplies to the tiny cells in dynamic RAM chips. When the device is powered down, it's capacitors lose their charge.

Carrier signal: An analog signal with known frequency, amplitude and phase characteristics used as a transport facility for useful information. By knowing the original characteristics, a receiver can interpret any changes as modulations, and thereby recover the information.

CCITT (Consultative Committee for International Telephone and Telegraph): An advisory committee created and controlled by the United Nations and headquartered in Geneva whose purpose is to develop and to publish recommendations for worldwide standardization of telecommunications devices. CCITT has developed modem standards that are adapted primarily by PTT (post, telephone and telegraph) organizations that operate telephone networks of countries outside of the U.S..

Character set: One of a number of coding schemes which uses binary digits to represent characters, numbers, punctuation, and/or control characters. Common character sets are ASCII, ANSI or EBCDIC.

Checksum: A control field found in synchronous data packets which contain the results of the error control algorithm used.

Chip: Also called integrated circuits (IC), they are squares or rectangles that contain from a few dozen to a few million electronic components.

Circuit: Any closed path through which electrical current can flow.

Circuit-switched Network: A technology used by the PSTN that allocates a pair of conductors for the exclusive use of one communication path. Circuit switching allows multiple conversations on one talk path only if the end-users multiplex the signals prior to transmission.

Circuit switching: The temporary connection of two or more communications channels using a fixed, non-shareable path through the network. Users have full use of the circuit until the connection is terminated.

Clock: A timing signal generated by an oscillating circuit which is used to synchronize data transmissions.

Command: An instruction that tells a computer to begin, continue or end a specific operation.

Command mode: One of two states of an intelligent (i.e. programmable) device. The mode in which commands can be issued to alter operating parameters.

CRC (Cyclic Redundancy Check): A field used in packetized data that contains two 8-bit BCCs (Block Check Characters) as the binary result of an algorithm performed on the data bits in the packet. A CRC is used for error detection by many synchronous protocols.

CTS (Clear To Send signal): With communications between modems, an RS-232 signal sent from the modem to the DTE that indicates it is ready to accept data. Contrast with RTS.

D

DC (Direct Current): This is usually understood to mean a constant voltage supply that fluctuates only a nominal amount. An analog or digital signal that may vary in voltage level, but it never crosses the reference voltage (usually called ground). Contrast with AC.

De facto standards: A de facto standard is one of two types of voluntary standards recognized by a given market. It is introduced by a single vendor and becomes a standard by its widespread use and acceptance by other vendors. AT&T's Bell 212A, IBM's Binary Synchronous Protocol or DEC's VT-100 terminal protocol are examples of de facto standards. Compare with de jure standards.

De jure standards: A de jure standard is one of two types of voluntary standards. It represents the collective consensus of the industry and users for a particular aspect of manufacturing. CCITT's V and X standards (e.g. V.32 and X.25) are examples of de jure standards. Compare with de facto standards.

Decibel (dB): A unit of measurement for signal strength based on logarithmic increments. A decibel is a relative measurement that is derived from an initial reference level and a final observed level.

Default: This is preset value or option in software packages, or in hardware configuration, that is used unless you specify otherwise.

Device driver: Software that controls how a computer communicates with a device, such as a printer or mouse.

Digital signal: Digital devices, such as terminals and computers, transmit data as a series of electrical pulses which have discrete jumps rather than gradual changes.

Digital Transmission: A method of electronic information transmission common between computers and other digital devices. Analog signals are waveforms: a combination of many possible voltages. A computer's digital signal may be only "high" or "low" at any given time. Therefore, digital signals may be "cleaned up" (noise and distortion removed) and amplified during transmission.

DIP switch (pronounced "dip switch"): A set of tiny toggle switches, built into a DIP (dual in-line package), used for setting configurable parameters on a PCB (printed circuit board).

DPSK (Differential Phase Shift Keying): A common form of phase modulation used in modems. It does not require complex demodulation circuitry and is not susceptible to random phase changes in the transmitted waveform, thus reducing errors during transmission.

DSR (Data Set Ready): An RS232 signal sent from the modem to the computer or terminal indicating that it is able to accept data. Contrast with DTR.

DTE (Data Terminating Equipment): A term used to include any device in a network which generates, stores or displays user information. DTE is a telecommunications term which usually refers to PCs, terminals, printers, etc.

DTMF (Dual-Tone MultiFrequency): A generic push-button concept made popular by AT&T TouchTone.

DTR (Data Terminal Ready): An RS232 signal sent from the computer or terminal to the modem indicating that it is able to accept data.

E

EBCDIC (Extended Binary Coded Decimal Interexchange Code) (pronounced "eb suh dick"): An IBM character code used in its mainframe and midrange computers. It is an 8-bit code (256 combinations) that stores one alphanumeric character or two decimal digits within a byte. This code and ASCII are the most commonly used to represent data.

Echo: The reflection or duplication of a signal back toward its source. Echoing is useful when a terminal is transmitting data, in that the data can be echoed to the screen so the user can monitor what is being sent. Echoing is undesirable when it refers to the signal which results on a telephone line from impedance mismatches.

Echo cancellation: A high speed modem technique that isolates and filters out unwanted signals caused by echoes from the main transmitted signal. This allows full-duplex modems to send and receive on the same frequency carrier.

EIA (Electronics Industries Association): A membership organization founded in 1924 that includes manufacturers of electronic parts and systems. With over 1200 members, it sponsors shows and seminars and gives awards for outstanding contributions in electronics. It sets electronic interface standards, such as RS-232.

Environment: A computer configuration that includes the CPU model and system software (operating system, data communications and database systems). It may also include the programming language used. It sets the standards for the applications that run in it.

EPROM (Erasable Programmable Read Only Memory) (pronounced "eeprom"): A reusable PROM chip that holds its contents until erased under ultraviolet light.

Error correction: The process of detecting distorted data bits and requesting a retransmission or interpretation to correct the error. Errors are introduced by bad line conditions or external interface.

F

Fax (facsimile): Refers to the bit-mapped rendition of a graphics-oriented document (fax) or to the electronic transmission of the image over telephone lines (faxing). Fax transmission differs from data transmission in that the former is a bit-mapped approximation of a graphical document and, therefore, cannot be accurately interpreted according to any character code.

Firmware: A category of memory chips that hold their content without electrical power, they include ROM, PROM, EPROM and EEPROM technologies. Firmware becomes "hard software" when holding program code.

Flash Memory: A memory chip that holds its content without power, but must be erased in bulk. The term comes from its ability to be erased "in a flash". Flash memory is derived from EEPROM, but are less expensive and provide higher bit densities.

Flow control: The process of regulating the speed at which data enters or leaves a serial port. Software flow control is implemented by communications software or by the user sending predefined characters or packets which are recognized as "pause" and "resume" indicators. Hardware flow control is achieved by using the RTS (request to send) and the CTS (clear to send) control lines of the RS232 interface.

Footprint: The desk or floor surface that a piece of hardware occupies. Also referred to as "real estate".

Foreground: The application program currently running on and in control of the PC screen and keyboard. The area of the screen that occupies the active window. Compare with background.

Format:

1. The way text is set up on a page.
2. To prepare a disk for holding information. Formatting a disk can delete all information that was previously on it.
3. The way information is structured in a file, often specific to one application or protocol.

Frequency: A characteristic of an electrical or electronic signal which describes the periodic recurrence of cycles. Frequency is inversely proportional to the wavelength or pulse width of the signal (i.e., long wavelength signals have low frequencies and short wavelength signals yield high frequencies).

Full-duplex: A method of transmitting and receiving data simultaneously over a single pair of wires. Compare with Half-Duplex.

G

H

Half-Duplex: The transmission of data in both directions, but only one direction at a time. Compare with Full-Duplex.

Handshaking: A process that two modems go through at the time of call setup to establish synchronization over the data communications link. It is a synchronization and negotiation process accomplished by the exchange of predefined, mutually recognized control codes.

Hard Disk: A metal disk covered with magnetic recording material. Some can hold up to several hundred megabytes of information. Contrast with floppy disk.

Hardware: The equipment that makes up your computer system, including the keyboard, mouse, disk drives and monitor.

Hexadecimal: A base 16 numbering system used to represent binary values. Hex uses the numbers 0-9 and the letters A-F: usually notated by an "h" (e.g., "4CF h", read "four charley fox, hex"). The result is that one hex digit represents a 4-bit value.

Host: The computer that is designated as retaining information or processing power to service the needs of other computers or terminals. Mainframes and mid-range computers are hosts; however, with today's powerful microprocessors, PCs can also be configured to serve as hosts. Often, a PC on a LAN will be set up as a host to provide LAN access for remote users.

I

Initialize: To start anew and establish start-up parameters, typically involves clearing all or some part of the device's memory or disk space.

Interface: A common meeting ground supplied by hardware or software to facilitate a compatible connection and operation between two devices or programs. For example, when two PCs are connected, they use a common interface across the physical connectors, so that the signals being sent and received are accurately interpreted. With software, an interface is a module created to be "written to". That is, if two programs are written to the same interface, then they can be successfully linked together.

IRQ Level (Interrupt Request Level): The notification a processor receives when another portion of the computer's hardware requires its attention. IRQs are numbered so that the device issuing the IRQ can be identified, and so IRQs can be prioritized.

J

K

Kilobit: One thousand bits. A unit of measure for digital data rates.

Kilobyte: One thousand bytes. A unit of measure for digital data rates. Not to be confused with "K", which stands for z^{10} bytes of storage space, either in memory or on disk. 1K of disk space is actually 1024 bytes, 16K is 65,536 bytes and 1M (meg) is 1,048,576 bytes.

L

Leased Line: A private, dedicated communications channel that connects two locations. This connection lasts for the duration of the subscription. Leased lines may be conditioned to improve line quality over that of dial-up lines.

Line Conditioning: An additional cost option offered by the telephone company for their leased, voice-grade lines. The service provides a careful balance of line enhancements to improve the frequency response and to reduce distortion.

LRC (Longitudinal Redundancy Check): Error checking method that generates a parity bit from a specified string of bits on a longitudinal track. In a row and column format such as on magnetic tape, LRC is often used with VRC, which creates a parity bit for each character.

M

Mainframe: A large, powerful computer used to centralize a data processing environment. It has hundreds of gigabytes of disk storage space. It uses a front end processor to connect directly to the communications channels that interconnect terminals and computers.

Megabyte: One million bytes when describing a data rate. 1M of disk space may actually mean 1,048,576 bytes.

Mid-range computer: A term coined by IBM referring to any of their Advanced Business Systems computers. This product line was originally called their mini-computers, but as the number of supported users approached mainframe capabilities, the term "mid-range" caught on.

Mnemonics: A term assigned to a complex idea, value, or list of information which is found to be representative of that information. Computer commands are almost entirely mnemonics. Mnemonics are used as memory aids for people.

Modem: A communications device that enables a computer to transmit information over a telephone line. It converts the computer's digital signals into analog signals to send over a telephone line and converts them back to digital signals at the receiving end. Modems can be internal and fit into an expansion slot, or external and connect to a serial port.

Modulation: The process of encoding information from one signal (called the source) into another (called the carrier) by modifying some characteristic(s) of the carrier. It is often used in telecommunications when one type of signal must be converted for transmission over an otherwise incompatible medium.

Multiplexer (mux): A device that merges several signals into one composite signal for transmission over a single medium or channel. A de-multiplexer (usually built into a mux) reverses the process at the receiving end.

N

NAK (Negative Acknowledgment): Communications code used to indicate that a message was not properly received, or that a terminal does not wish to transmit. Contrast with ACK.

Network: A group of computers connected by cables or other means and using software that enables them to share equipment, such as printers and disk drives to exchange information.

Node: Any point within a network which has been assigned an address.

Normal mode: In modem operation, refers to a mode of operation without error correction active.

O

Off-hook: The condition of a device which has accessed a phone line (with or without using the line). In modem use, this is equivalent to a telephone handset being picked up. Dialing and transmission are allowed, but incoming calls are not answered.

On-Hook: The condition of a device which has not accessed a phone line. In modem use, this is equivalent to a telephone handset that has not been picked up. In other words, it can receive an incoming call.

P

Parameter:

1. A "place holder" in a command which should be substituted with useful information.

2. The list of acceptable values for a given option or command. In UNIX, the generic command should be typed in as Stty/s 9600. Where "Stty" is the command, "s" is the speed switch, and "9600" where s=1200-115,200 bps.

Parity bit: An extra bit attached to each byte of synchronous data used to detect errors in transmission.

PCB (Printed Circuit Board): A flat board that holds chips and other electronic components. The board is "printed" with electrically conductive pathways between components. The main PCB in a system is called a motherboard and the smaller PCBs that plug into the slots in the motherboard are called daughter boards or cards.

PCMCIA (personal computer memory card international association): An organization of U.S. and Japanese companies set up to standardize memory cards and other architecture-independent expansion devices. These cards are typically used in laptop computers.

Phase: The timing of a signal based upon the starting point of each cycle in another signal. To be detected phase requires the comparing of two signals. If the cycle of two signals begin at the same point, they are said to be "in-phase". In-phase signals add, while out-of-phase signals tend to cancel each other.

Port: A location for input or output data exchange. Computers, muxes, etc. have ports for various purposes.

Program: A collection of computer instructions that tell the computer what to do.

PROM (Programmable Read Only Memory): (pronounced "prom") A permanent memory chip that can be programmed or filled by the customer after by the manufacturer has set initial values. Contrast with ROM.

Prompt: A request for information from the PC that provides required input or information.

Protocol: A set of rules that defines how computing devices communicate with each other. The rules governing the transmitting and receiving of data.

PSTN (Public Switched Telephone Network): A worldwide public voice telephone network that is used as a telecommunications medium for the transmission of voice, data and other information.

Pulse dialing: One of two methods of dialing a telephone, usually associated with rotary-dial phones. Compare with tone dialing.

Pulse-width: This pertains to a digital signal. Pulse width refers to the duration of one state between clocking signals. Pulse width roughly corresponds to an analog signal's wavelength.

Q

Queue: A set of activities that are waiting in chronological order for an action, such as printing, to be performed.

R

Rack: A frame or cabinet into which components are mounted. The industry standard rack is 19" wide and has variable depth and height.

Rackmount: A packaging style available for many types of electronic equipment which enables the installer to mount the equipment in an industry standardized enclosure. The rackmount equipment is fitted with brackets, rather than being packaged in its own enclosure. Rackmounting conserves disk or floor space (real estate) and often conserves power outlets.

RAM (Random Access Memory) (pronounced "ram"): A computer's primary workspace. All data must be stored in RAM (even for a short while), before software can use the processor to manipulate the data. Before a PC can do anything useful it must move programs from disk to RAM. When you turn it off, all information in RAM is lost.

RJ-11: An industry standard interface used for connecting a telephone to a modular wall outlet; comes in 4-and 6-wire packages.

RJ-45: An 8-wire modular connector for voice and data circuits.

ROM (Read Only Memory) (pronounced "rom"): A memory chip that permanently stores instructions and data. Its contents are created at the time it is manufactured and cannot be altered. ROM is used to store control routines in PCs and peripheral controllers. ROM is also used in the plug-in cartridges for printers and video games. A set of ROM chips contain the basic input/output system (BIOS).

RS232-C: An EIA standard for a serial interface between computers and peripheral devices (modem, mouse, etc.). It uses a 25-pin DB-25, or a 9-pin DB-9 connector. The RS-232 standard defines the purposes, electrical characteristics and timing of the signals for each of the 25 lines.

RTS (Request To Send signal): With communications between modems, an RS232 signal sent from the DTE to the modem requesting permission to transmit. Contrast with CTS.

S

Serial Port: The connector on a PC used to attach serial devices (those that need to receive data one bit after another), such as a mouse, a printer or a modem. This consists of a 9- or 25-pin connector that sends data in sequence (bit by bit). Serial ports are referred to as "COMx" ports, where x is 1 to 4 (i.e., COM1 through COM4). A serial port contains a conversion chip called a "UART" which translates between internal parallel and external serial formats.

Switched Line: In communications, a physical channel established by dynamically connecting one or more discreet segments. This connection lasts for the duration of the call after which each segment may be used as part of a different channel. Contrast with leased line.

Switched Network: A network in which a temporary connection is established from one point via one or more segments.

Synchronous Transmission: The transmission of data which involves sending a group of characters in a packet. This is a common method of transmission between computers on a network or between modems. One or more synchronous characters are transmitted to confirm clocking before each packet of data is transmitted. Compare to Asynchronous Transmission.

T

T1 Transmission: A standard transmission speed of 1.544M bps that may be used in its full bandwidth, or as narrower channels called "fractional T1" carriers.

Terminal: The screen and keyboard device used in a centralized computing environment for interactive data entry. Terminals have no "box", which is to say they have no file storage or processing capabilities.

Terminal emulation: This allows a PC to access a mainframe computer by generating and accepting data like a "dumb" terminal.

Threshold: A value or condition which, when reached, triggers an event.

Toggle: To alternate back and forth between two states.

Tone dialing: One of two methods of dialing a telephone, usually associated with Touch-Tone® (push button) phones. Compare with pulse dialing.

Transistor: A semiconductor device used to amplify a signal, or open and close a circuit. In digital computers, it functions as an electronic switch.

Twisted pair wiring: A type of cabling with one or more pairs of insulated wires wrapped around each other. An inexpensive wiring method used for LAN and telephone applications, also called UTP wiring.

U

UART (Universal Asynchronous Receiver/Transmitter) (pronounced "you art"): A chip that transmits and receives data on the serial port. It converts bytes into serial bits for transmission, and vice versa, and generates and strips the start and stop bits appended to each character.

UTP (unshielded twisted pair): Telephone-type wiring.

V

V.21: The CCITT modulation standard for 300 bps, full-duplex transmission over dial-up lines.

V.22: The CCITT modulation standard for 1200 bps, full-duplex transmission over a dial-up or 2-wire leased line. This is not common in North America.

V.22bis: The CCITT modulation standard for 2400 bps, full-duplex transmission over a dial-up or 2-wire leased line.

V.23: The CCITT modulation standard for 75/1200 bps, half-duplex transmission over dial-up lines. This is not common in North America.

V.24: The CCITT hardware interface specification for interchange circuits between the DTE and DCE.

V.35: The CCITT hardware interface specification commonly used by DSU/CSUs and other high-speed devices.

W

WATS (Wide Area Telephone Service) (pronounced "watts"): A discounted long-distance calling plan that allows calls in or out. The popular 800 numbers are WATS lines in. The calls are charged to the holder of the 800 number at a discounted rate.

Workstation: Traditionally a workstation has been a dumb terminal connected to a host. With the advent of LANs and WANs, PCs that are connected to a LAN are now called workstations also, even though they are capable of independent processing. A workstation, then, is simply an input/display device through which a user accesses a resource.

X

Y

Z

Index

Symbols

&W Command 5-5
2400 BPS MODEM DIAL-UP LINE Connector 3-5, 4-5
25-pin Female D Connectors 1-17
4-Position DIP Switch 3-10
8-Position DIP Switch SW1 6-4

A

Additional Composite Link Commands 5-17
Aggregate 1-3
Aggregate Board 4-2
Aggregate Board Switch SW-5 3-10
Analog Loop 1-13
ASCII Character Code/Hex/Decimal Conversion Chart A-1
Asynchronous Communications 1-5
Asynchronous Data Communication Channels 1-3
Asynchronous Input Channels 1-1
Asynchronous Line 1-3
Asynchronous Terminals 1-4
AT Commands 1-2, 1-9
Auto-Reporting 1-13
Automatic Fax 1-18

B

Back Pane I1-2
Bulletin Board Service (BBS) 8-3
Bxxxxx Command 5-9

C

Cabling Diagrams D-1
Carrier Detect (CD) indicator 3-2, 3-3
CCITT V.24 1-17
CHANNEL 1 1-8
CHANNEL 8 1-8
Channel Board 4-4
Channel Board Four-Position DIP Switch 3-10
Channel Devices 1-5
Channel Device Testing 7-11
Channel Device Testing Procedure 7-11
Channel Flexibility 1-11
Channel Off Command 5-9
Channel Select Command (C1-C32) 5-9
Channel Status Command (#S1-#S32) 5-15
Channel Switching 1-12
Channel Transmit (XMT) 3-2
Clear Composite Statistics command (#C) 5-17
Clear To Send (CTS) Indicator 3-2
Command Functions 1-17
Command Modem 1-2, 1-12, 1-19
Command Modem Commands 5-27, D-1
Command Modem Operating Procedures 6-7
Command Modem S-Register Functions E-1

Command Modem Select Command #MA1 5-27
COMMAND PORT 1-8, 1-9
Command Port 1-1, 1-12
Command Port Cables C-2
COMMAND PORT Connector 4-5
COMMAND PORT TERMINAL/PC Connector 3-6
Command Summary 5-2
Communications Link 1-4
Composite Link 1-2, 1-4, 1-5, 1-18
Composite Link (RS232C Interface) 4-1
Composite Link (V.35 Interface) 4-2
COMPOSITE LINK A EXTERNAL MODEM/DSU Connector 2-4, 3-6
COMPOSITE LINK A INTERNAL DSU Connector 3-6
COMPOSITE LINK A or B (RS232C/V.35) EXTERNAL MODE 4-1
COMPOSITE LINK A or B INTERNAL Connector 4-1
COMPOSITE LINK B EXTERNAL MODEM/DSU Connector 3-6
COMPOSITE LINK B INTERNAL DSU Connector 3-6
Composite Link Cable 4-1
Composite Link Speeds 1-4
Composite Link Status Report (#S) 5-19
Composite Link Statistics 7-1
CompuServe 8-4
Configuration 1 2-2
Configuration 2 2-4
Configuration 3 2-5
Configuration 4 2-8
Configuration 5 2-11
Configuration 6 2-13
Configuration 7 2-15
Control Ribbon Cable 4-2

D

Data and Address Ribbon Cable 4-2
Data Communications 1-3
Data Format 1-17, 1-18
Data Troubleshooting Guide 7-4
DB25 Female Connector 3-6
DDS 1-8
Dedicated Network 1-8
Destination Channel Number Command (DC) 5-9
Destination Node Number Command (DN) 5-9
Diagnostics 1-13
Digital Data Service (DDS) 2-2
Digital Service Units (DSU) 1-1
DIP Switch 1-9
DIP Switch SW-5 3-10
DOC 1-16
Downline Parameter Loading 1-12
DSU 1-1
DSU and Communications Line Testing 7-12
DSU and Communications Line Testing Procedure 7-12
DSU Clock Command ($DSUCL) 5-16
DSU Speed Command ($DSUSP) 5-16
Dual Composite Links 1-10
Dynamic Buffering 1-13
Dynamic Load Balance 1-11

E

E&M 1-6, 1-8
E&M (I-V) Voice/Fax Channel Cable

..... 4-1, C-5
E&M to E&M 2-1
E&M Wink 2-1
Ear and Mouth 1-6
Ear and Mouth (E&M) Indicator 3-3
Echo Command (E0-E1) 5-10
ENQ/ACK 1-17
Enquire/Acknowledge Flow Control (F3-F4) Command 5-10
Error Correction 1-18
EXTERNAL COMPOSITE LINK
RS232C/V.35 Connector 1-9

F

Factory Default Command 5-14
FAX Indicator 3-4
Fax Transmissions 1-4
FCC Regulations 1-15
Firmware Version 8-2
Flow Control 1-4, 1-11, 1-17
Flow Control (FC) Indicator 3-2
Flow Control Background F-1
Flow Control Command (F0-F2) 5-10
Flow Control Received (FCR) Indicator
..... 3-2, 3-3
Flush Timer Value (#FT) 5-17
Foreign Exchange Office 1-6
Foreign Exchange Office (FXO) Indicator
..... 3-3
Foreign Exchange Station 1-6
Foreign Exchange Station (FXS) Indicator
..... 3-3
Four-Position DIP Switch 3-10
Frequency 1-19
Front Panel 3-1
Front Panel LED Status Command (#SL)
..... 5-19
FXO 1-6, 1-8
FXS 1-6, 1-8
FXS Ground Start 2-1
FXS Loop Start 2-1
FXS to FXO 2-1
FXS to FXS 2-1

G

General Help 5-6
Group 3 Fax Rates 1-18

H

HDLC 1-3
Help Commands 5-5
High Level Data Link Control 1-3

I

Identification Command (I0-I2) 5-12
Interface 1-18
Internal DSU 1-18
Inverted DTR Command (F11-F12) 5-11

L

LADS 1-18

LED Indicators 3-2
Limited Warranty 1-2, 8-1
Line Interface 1-18
Link Protocol 1-3, 1-18
Link Speed 1-18
Link Voice/Fax Communicates Over
Command (V(1/2)ML) 5-21
List Channel Parameters Command
(L0-L32) 5-12
List Composite Link Configuration Command ($L) 5-17
List Composite Link Settings Command
(#L) 5-18
List The Voice/Fax Channel Parameters command (VL) 5-20
Load DSU Factory Defaults Command
($F) 5-17
Load Number 1-16
Local Access 1-17
Local Area Data Set 1-18
Local Loop Test (&T4) 5-25
Local Voice Channel 1 (V1) 5-21

M

Main Frame Computer 1-4
Memory Test 2 (&T2) 5-25
Memory Tests (&T1-T3) 5-25
MLA/B/D 5-12
MLD Command 1-11
Model No. 1-15, 8-2
Modem Link Command (MLA/B/D) 5-12
Multi-Tech BBS 8-3
MultiMux 1-1
MultiMux Functional Testing 7-13
MultiMux Functional Testing Procedure
..... 7-13
MultiMux Operating Procedures 6-1
Multiplexing 1-1
Multipoint 1-5
Mux Clock Command ($MUXCL) 5-16
Mux Speed Command ($MUXSP) 5-16
MV2 Voice/Fax board 2-8, 2-15

N

Networking 1-10
Non-Volatile Memory test 5-26
Number of Channels 1-18
Number of Channels Switch 3-10
Number of Links 1-18

O

Off-Hook Indicator 3-3
ON/OFF Switch 3-5
Operating Procedures 6-1
Operational Statistics 1-13
OPX 3-8
OPX (Off Premises Extension) 3-7

P

Pacing 1-4, 1-17
Pacing Control Command (F5-F6) 5-10
Parameter Memory 1-12

Parity 1-17
Parity Select Command (P0-P2) 5-13
Parts of your Mux Network 7-3
Pass EIA Signal Commands (F7-F8) ... 5-11
Pass Xon/Xoff Command (F9-F10) 5-11
PBX 1-6, 1-8
PBX E&M Trunk 2-11
PC 1-4
PC Board Power Cable 4-2
PDN 1-8, 1-9
Point-to-Point 1-5
Point-to-Point Network 1-11
Power Connector 3-5
Power Consumption 1-19
Priority Control 1-14
Priority Statistical Multiplexer 1-1
Priority Statistical Multiplexing 1-4
Programmable Retransmit Timer (#RXT) Command 5-18
PSM 1-1
PSTN 1-10
Public Data Network 1-8
Public Switched Telephone Network 1-10

Q

Quarter-Turn-Fasteners 4-4
"Quick brown fox" Message Test (&T11)
..... 5-26

R

Receive (RCV) Indicator 3-2, 3-4
Recording MultiMux Information 8-2
Remote Access 1-17
Remote Command Modem Access Command #RA1 5-27
Remote Down (RD) indicator 3-3
Remote Source Number Group Select (SNGA..H) 5-14
REN 1-15
Reset Command 5-5
Reset Voice/Fax Channel Command
(V(1/2)Z) 5-20
Response Time 1-14
Response Time Control 1-14
Response Time Priority Command
(R0-R3) 5-13
Retransmit (RXT) Indicator 3-3
Ringer Equivalence Number 1-15
RJ11 Phone Cable 4-1
RJ48 Phone Cable 4-1
RJ48S 1-18
RS232 1-5
RS232C Interface Specification B-1
RS232C/V.24 Interface 3-11
RS232C/V.35 Shunt 3-11, E-9

S

Select Downline Load Parameters Command (&SR) 5-15
Select Local Parameters Command 5-15
Serial No. 8-2
Service 1-2, 8-3
Signaling 1-18
Small Telephone Switch 1-6
SNGynnn 5-14

Source Node Command (SN) 5-13
Specifications 1-17
Stat Muxes 1-3
Statistical Multiplexers 1-3
Status Report Baud Rate (#RB) 5-18
Status Report Time (#RT) 5-18
STDM 1-4
Stop Bit Command (SB1-SB2) 5-13
Store New Parameters command 5-5
Store New Parameters Command (&W) 5-1
Switch and LED Operational Test (&T7) 5-26
Switches and Shunts 3-9
Synchronous Communications 1-1
Synchronous Composite Links 1-1
Synchronous Data Packets 1-3
System Control 1-17
System Features 1-10

T

Tech Support 1-2, 8-2
Telco Facility 2-2
Terminals 1-4
Test Cables 7-2
Test Commands (&T1-&T12) 5-25
Test Mode (TM) Indicator 3-4
Transmit (XMT) Indicator 3-2, 3-4
Troubleshooting 7-3

U

Universal Channel Parameters (C0) 5-9

V

V.22bis/V.22 1-19
V.24 Position 4-3
V.24 Shunt 3-11
V.24/V.35 Shunt 4-3
V.35 1-8
V.35 Interface 3-11
V.35 Interface Adapter Cable 4-4
V.35 Position 4-3
V1LIFXO Command 2-8
V1RIFXS Command 2-8
V2LIFXO Command 2-8
V2RIFXS Command 2-8
Voice (VCE) Indicator 3-4
Voice Channel 1-18
Voice Digitization Rates 1-18
Voice-Grade Phone Line 1-4
Voice/Fax 1-10
Voice/Fax Board 4-2
VOICE/FAX CHANNEL 1 E&M Connector 3-7
VOICE/FAX CHANNEL 1 FXO Connector 2-8, 3-8
VOICE/FAX CHANNEL 1 FXS Connector 3-7
VOICE/FAX CHANNEL 1or 2 E&M Connector 2-15
VOICE/FAX CHANNEL 1or 2 FXS Connector 2-13
VOICE/FAX CHANNEL 2 E&M Connector 3-7

VOICE/FAX CHANNEL 2 FXO Connector 3-7
VOICE/FAX CHANNEL 2 FXS Connector 3-7
Voice/Fax Channel Parameters 2-10
Voice/Fax Channels 1-1, 1-8
Voice/Fax Channel Testing 7-15
Voice/Fax Channel Testing Procedure . 7-15
Voice/Fax Destination Channel Command (V(1/2)DC) 5-21
Voice/Fax Destination Node command (V(1/2)DN) 5-21
Voice/Fax Digitizing Rate Command (V(1/2)DR) 5-21
Voice/Fax Local Interface Command (V(1/2)LI) 5-24
Voice/Fax Loopback Test (&T12) 5-26
Voice/Fax Input Level Gain Command (V(1/2)IL) 5-21
Voice/Fax Operating Procedures 6-5
Voice/Fax Output Level Attent Command (V(1/2)OL) 5-22
Voice/Fax Remote Channel Interface Command (V(1/2)RI) 5-24
Voice/Fax Troubleshooting Guide 7-8
Voice/Fax Silence Suppression Command (V(1/2)SS) 5-23
Voltage 1-19

W

Warranty 1-2
Watch-Dog Timer Test 5-26
Wink Timer Command (V(1/2)WT) 5-25
Word Length Select Command (WL5-8) 5-14

X

XMT/RCV 3-2
Xon/Xoff 1-17
Xon/Xoff Flow Control Signals 5-11
Xoff/First Character 5-2,5-12